EECS 290S: Network Information Flow	Fall 2008

Lecture 26 — December 2

Lecturer: Anant Sahai and David Tse *Scribe: I-Hsiang Wang*

The symmetric Gaussian interference channel is depicted in Figure **??** (a), and the corresponding linear deterministic deterministic interference channel is depicted in Figure **??** (b). The goal of introducing linear deterministic interference channel is to gain some insight for characterizing the capacity of Gaussian interference channel, which has been open for a long time.

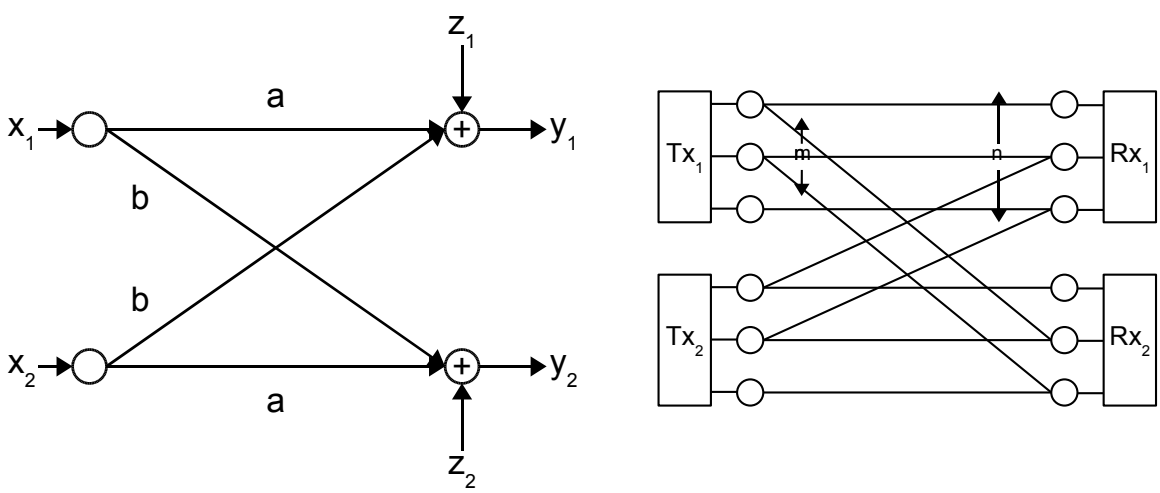

(a) Symmetric Gaussian interference channel: $|a|^2 = \mathsf{SNR}$, $|b|^2 = \mathsf{INR}$

(b) Corresponding linear deterministic interference channel: $n \leftrightarrow \log_2 \mathsf{SNR}$, $m \leftrightarrow \log_2 \mathsf{INR}$

Figure 26.1. Interference Channels

26.1 Linear Deterministic Interference Channel

Let $\mathcal{C}$ denotes the capacity region. Focus on the symmetric capacity $C_{sym} := \max\{\frac{R_1+R_2}{2} : (R_1, R_2) \in \mathcal{C}\}$. The channel is fully specified by (n, m), and we denote $\alpha := \frac{m}{n}$, which captures the amount of coupling between signal and interference. It turns out that $\frac{C_{sym}}{n}$ is

a function of α, say, $c(\alpha)$, and the plot of $c(\alpha)$ versus α is provided in Figure **??**, and

$$c(\alpha) = \begin{cases} 1-\alpha, & 0 \le \alpha \le 1/2 \\ \alpha, & 1/2 \le \alpha \le 2/3 \\ 1-\alpha/2, & 2/3 \le \alpha \le 1 \\ \alpha/2, & 1 \le \alpha \le 2 \\ 1, & \alpha \ge 2 \end{cases} .$$

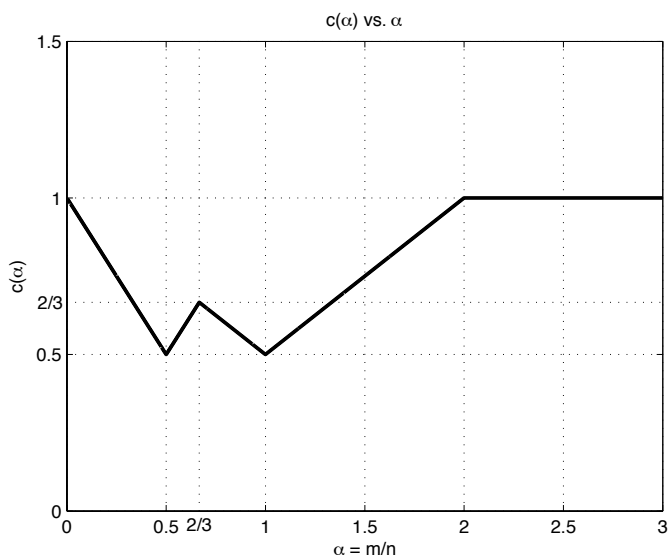

Figure 26.2. $c(\alpha)$

26.1.1 Strong Interference: $\alpha > 1$

The capacity region of strong interference channel is just the capacity region of the compound MAC. Therefore, the sum capacity is

$$\begin{aligned} &\min(m, 2n) \\ &\Rightarrow C_{sym} = \frac{\min(m, 2n)}{2} \\ &\Rightarrow c(\alpha) = \min(\alpha/2, 1) = \begin{cases} \alpha/2, & 1 \le \alpha \le 2 \\ 1, & \alpha \ge 2 \end{cases} . \end{aligned}$$

26.1.2 Weak Interference: $\alpha \leq 1$

Case 1: $\alpha \leq 1/2$

Either pure-private transmission or treating-interference-as-noise can achieve $R_1 + R_2 = 2n - 2m$, and hence can achieve

$$\frac{R_{sym}}{n} = 1 - \alpha.$$

Case 2: $1/2 < \alpha \leq 1$

An example where $n = 3, m = 1$ is given in Figure **??**. Treating-interference-as noise can only achieve $R_1 + R_2 = 2$, while the optimal scheme can achieve $R_1 + R_2 = 4$ by utilizing the *holes* of signal space.

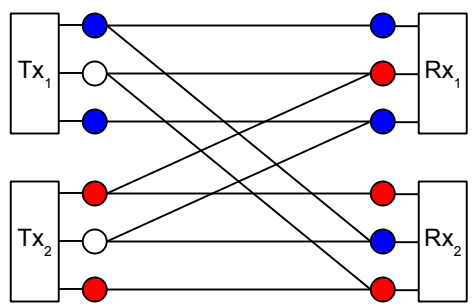

Figure 26.3. Optimal scheme for $n = 3, m = 1$ interference channel

From this example, we propose the following scheme: transmitter i splits it message into common and private parts: m_{ic}, m_{ip}, for $i = 1, 2$. At the receivers, the decoding order is set to: first decode both common messages while treating the private parts as noise, and then decode its own private message. That is, the decoding order is: for receiver i,

$$\hat{m}_{1c}, \hat{m}_{2c} \to \hat{m}_{ip}, \ i = 1, 2.$$

Hence the private rates are: $R_{ip} = n - m$, for $i = 1, 2$. For the common parts, the MAC rate region at each receiver is depicted in Figure **??**.

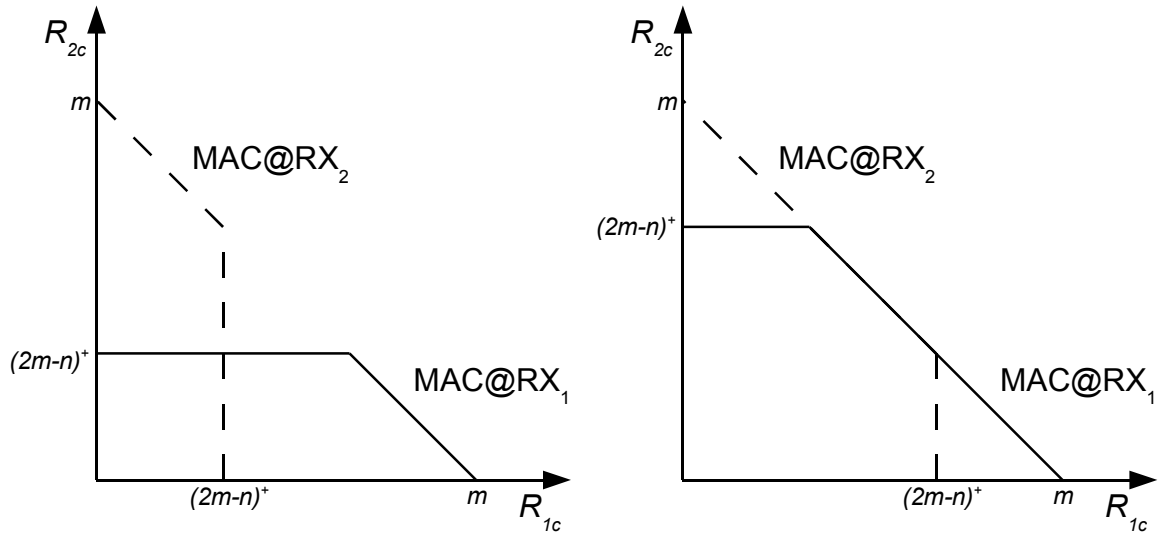

(a) Sum rate constraint is not active: $\alpha < 2/3$ (b) Sum rate constraint is active: $2/3 \leq \alpha < 1$

Figure 26.4. MAC rate regions for common messages at both receivers

Therefore, this scheme can achieve

$$R_{1c} + R_{2c} = \begin{cases} 4m - 2n, & 1/2 < \alpha \leq 2/3 \\ m, & 2/3 < \alpha \leq 1 \end{cases}$$

$$\Rightarrow R_1 + R_2 = \begin{cases} 2m, & 1/2 < \alpha \leq 2/3 \\ 2n - m, & 2/3 < \alpha \leq 1 \end{cases}$$

$$\Rightarrow \frac{R_{sym}}{n} = \begin{cases} \alpha, & 1/2 < \alpha \leq 2/3 \\ 1 - \frac{\alpha}{2}, & 2/3 < \alpha \leq 1 \end{cases}$$

26.1.3 Summary

The following is achievable:

$$\frac{R_{sym}}{n} = \begin{cases} 1 - \alpha, & 0 \leq \alpha \leq 1/2 \\ \alpha, & 1/2 \leq \alpha \leq 2/3 \\ 1 - \alpha/2, & 2/3 \leq \alpha \leq 1 \\ \alpha/2, & 1 \leq \alpha \leq 2 \\ 1, & \alpha \geq 2 \end{cases}.$$

26.2 Upper Bounds

We establish the achievable sum rate for symmetric linear deterministic interference channel in the previous section. To see whether it is optimal, we need some upper bounds. By Fano's

inequality and data processing inequality, if a rate pair (R_1, R_2) is achievable,

$$\begin{aligned} N(R_1 + R_2 - \epsilon_N) &\le I(W_1; Y_1^N) + I(W_2; Y_2^N) \le I(X_1^N; Y_1^N) + I(X_2^N; Y_2^N) \\ &= H(Y_1^N) - H(Y_1^N|X_1^N) + H(Y_2^N) - H(Y_2^N|X_2^N) \\ &= H(Y_1^N) - H(V_2^N) + H(Y_2^N) - H(V_1^N). \end{aligned}$$

where $\epsilon_N \to 0$ as $N \to \infty$.

From the last line one can see the tension between making interference weaker while making signal stronger. In order to derive good upper bounds, we can gain insight from the achievable scheme:

Case 1:

When $2/3 < \alpha < 1$, the MAC regions for common massages for both receivers, as depicted in Figure **??** (b), implies that one should give some side information to receivers while keeping the sum rate constraint active. Therefore, we should give asymmetric side information, as follows: (give side information V_1^N, V_2^N to receiver 1)

$$\begin{aligned} N(R_1 + R_2 - \epsilon_N) &\le I(X_1^N; Y_1^N) + I(X_2^N; Y_2^N) \le I(X_1^N; Y_1^N, V_1^N, V_2^N) + I(X_2^N; Y_2^N) \\ &= I(X_1^N; V_1^N) + I(X_1^N; Y_1^N|V_1^N, V_2^N) + I(X_2^N; Y_2^N) \\ &= H(V_1^N) + H(Y_1^N|V_1^N, V_2^N) + H(Y_2^N) - H(V_1^N) \\ &= H(Y_1^N|V_1^N, V_2^N) + H(Y_2^N) \le \sum_{i=1}^N H(Y_{1i}|V_{1i}, V_{2i}) + \sum_{i=1}^N H(Y_{2i}) \\ &\le N(n-m) + Nn \end{aligned}$$

Hence, if a rate pair (R_1, R_2) is achievable, then $R_1 + R_2 \le 2n - m$, matching the inner bound we have when $2/3 < \alpha < 1$

Case 2:

When $\alpha \le 2/3$, the MAC regions for common massages for both receivers, as depicted in Figure **??** (a), implies that one should give some side information to receivers, while at receiver 1 keeping the R_2 constraint active and vice versa. Hence, helping user i at receiver i does not enlarge the bound significantly. Therefore, we should give side information V_i^N to receiver i, for $i = 1, 2$:

$$\begin{aligned} N(R_1 + R_2 - \epsilon_N) &\le I(X_1^N; Y_1^N) + I(X_2^N; Y_2^N) \le I(X_1^N; Y_1^N, V_1^N) + I(X_2^N; Y_2^N, V_2^N) \\ &= I(X_1^N; V_1^N) + I(X_1^N; Y_1^N|V_1^N) + I(X_2^N; V_2^N) + I(X_2^N; Y_2^N|V_2^N) \\ &= H(V_1^N) + H(Y_1^N|V_1^N) - H(V_2^N) + H(V_2^N) + H(Y_2^N|V_2^N) - H(V_1^N) \\ &= H(Y_1^N|V_1^N) + H(Y_2^N|V_2^N) \le \sum_{i=1}^N H(Y_{1i}|V_{1i}) + \sum_{i=1}^N H(Y_{2i}, V_{2i}) \\ &\le N(2\max\{m, n-m\}) \end{aligned}$$

Hence, if a rate pair (R_1, R_2) is achievable, then $R_1 + R_2 \leq 2\max\{m, n-m\}$, matching the inner bound we have when $\alpha \leq 2/3$.