EE 40
Homework #3
Solutions

Problem 1:

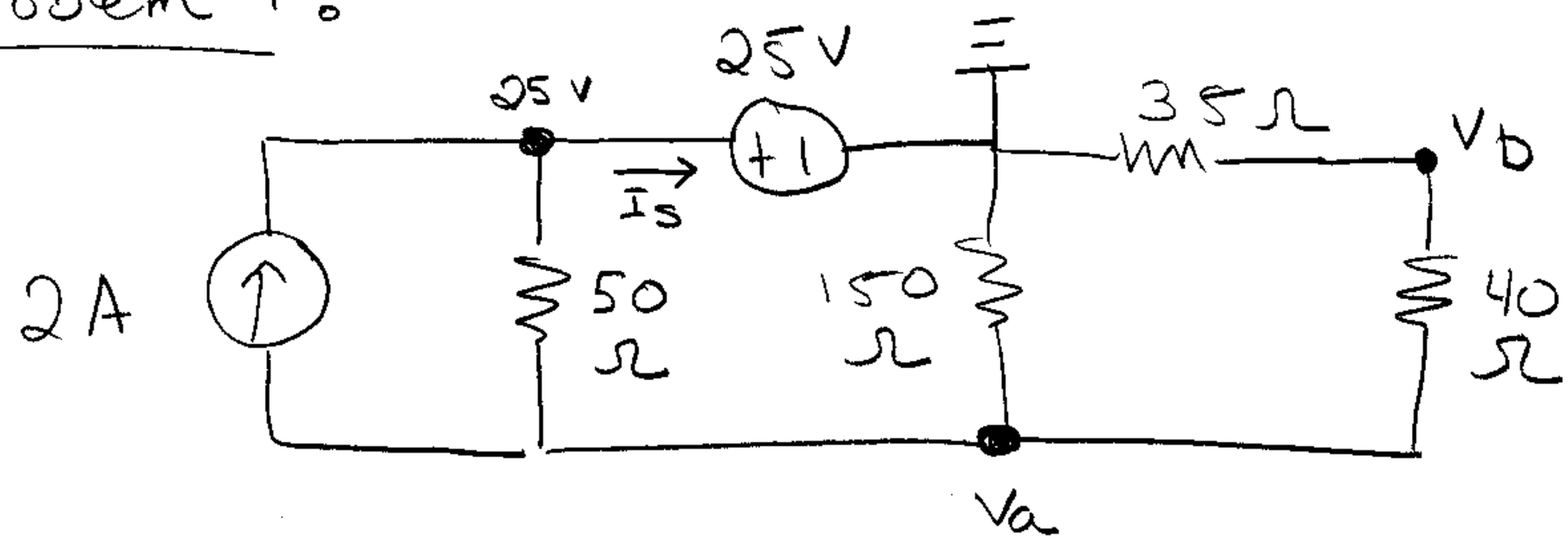

I chose ground & identified unknown node voltages V_a + V_b.

@ V_a: $$2A + \frac{V_a - 25V}{50\Omega} + \frac{V_a}{150\Omega} + \frac{V_a - V_b}{40\Omega} = 0$$

@ V_b: $$\frac{V_b}{35\Omega} + \frac{V_b - V_a}{40\Omega} = 0$$

$V_a = -37.5\,V$ $\qquad$ $V_b = -17.5\,V$

Current through 25V source is I_s

$$I_s = 2 + \frac{V_a - 25}{50} = 750\,mA$$

$$P = I_s \cdot 25\,V = 18.75\,W$$

Problem 2:

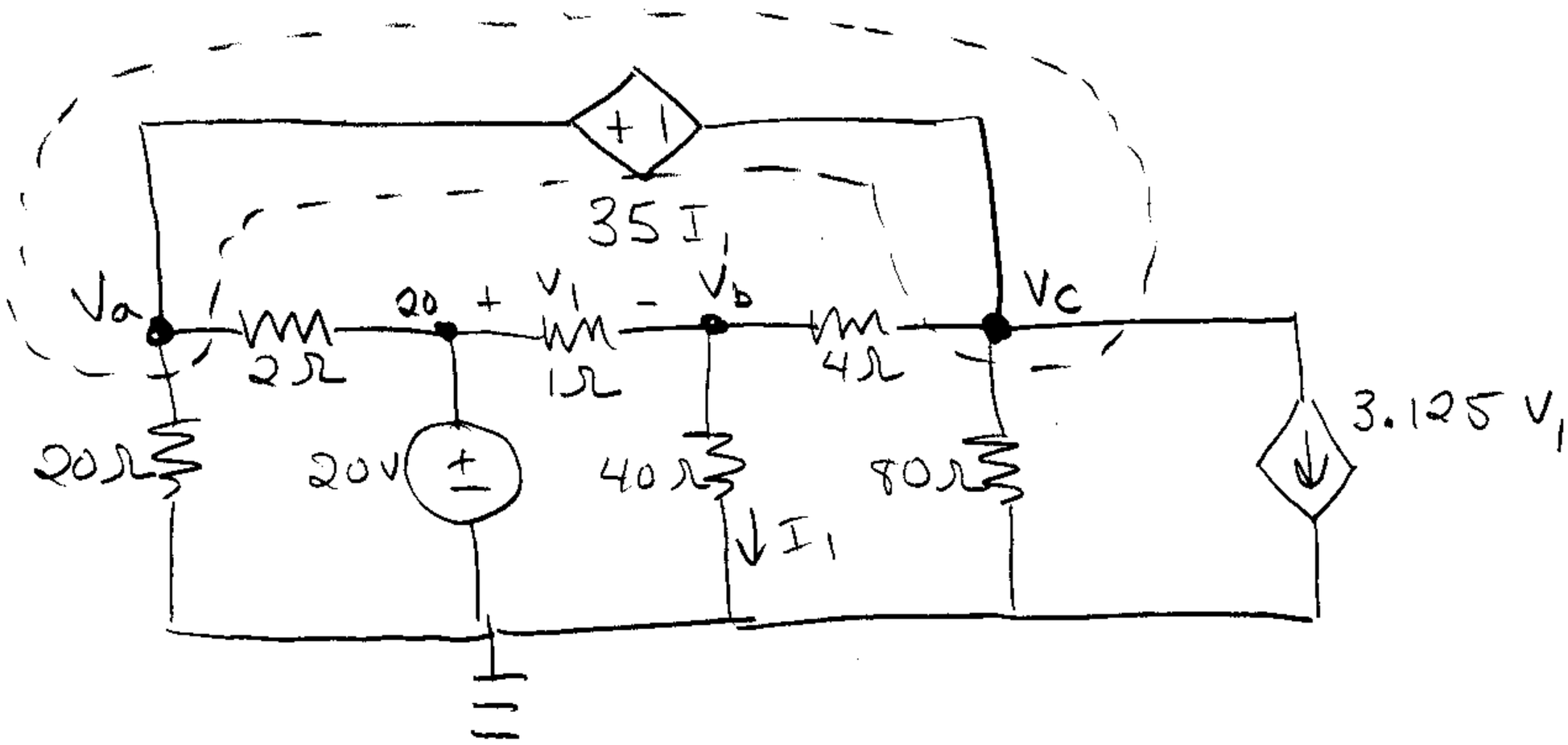

Supernode V_a & V_c as shown since  has neither terminal at ground.

KCL @ supernode:

$$\frac{V_a}{20\Omega} + \frac{V_a - 20V}{2\Omega} + \frac{V_c - V_b}{4\Omega} + \frac{V_c}{80\Omega} + 3.125V_1 = 0$$

Voltage relationship given by  :

$$V_a - V_c = 35 I_1$$

KCL @ V_b:

$$\frac{V_b - 20V}{1\Omega} + \frac{V_b}{40\Omega} + \frac{V_b - V_c}{4\Omega} = 0$$

Controlling parameters:

$$I_1 = \frac{V_b}{40\Omega}$$

$$V_1 = 20V - V_b$$

$V_a = -20.25\ V \qquad V_b = 10\ V \qquad V_c = -29\ V$

$P = (V_c)(3.125\ V_1) = (V_c)(3.125(20 - V_b))$

$= -906.25\ W$

Problem 3:

Method #1: Finding V_T & I_N directly via nodal analysis

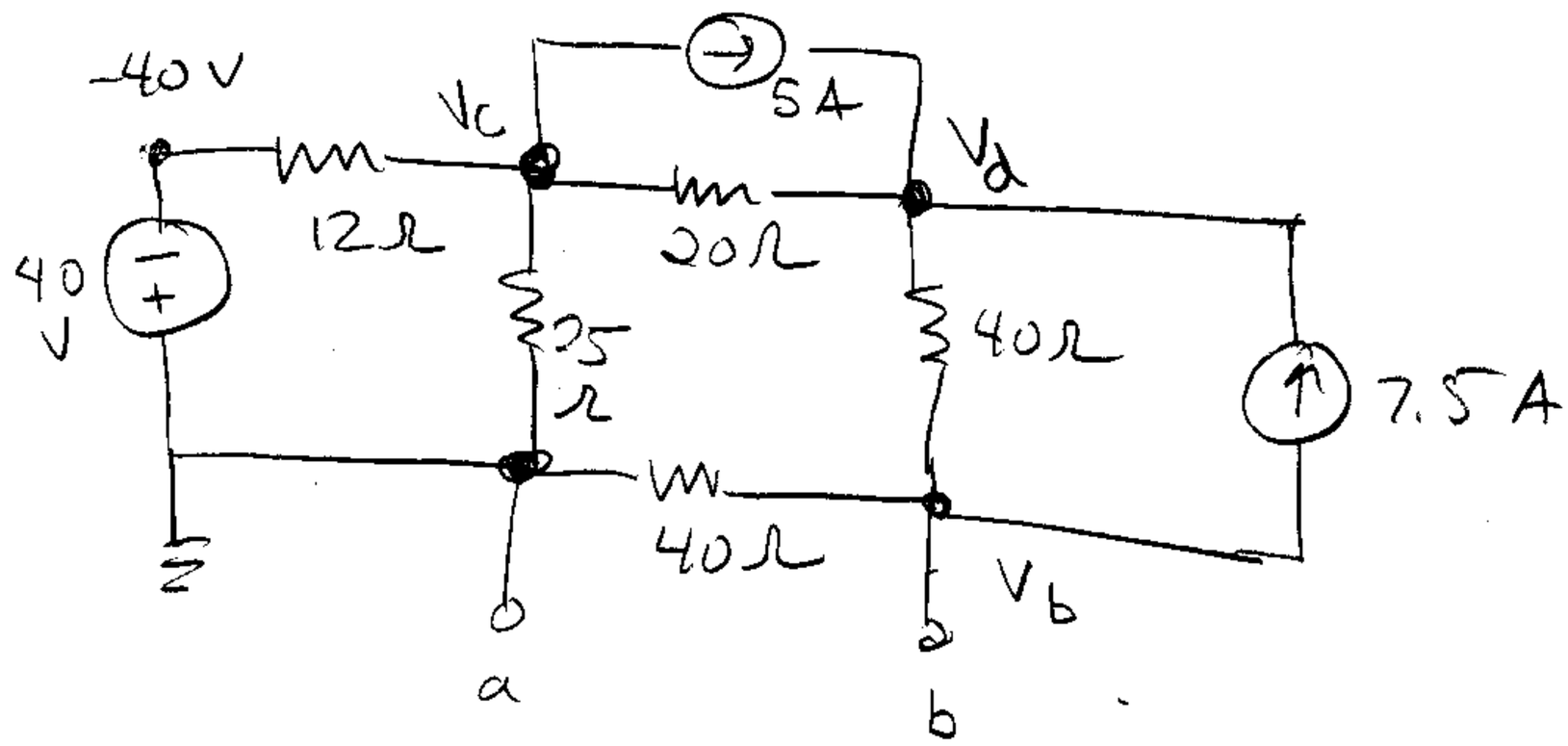

KCL @ V_b: $\dfrac{V_b}{40\Omega} + \dfrac{V_b - V_d}{40\Omega} + 7.5A = 0$

KCL @ V_c: $\dfrac{V_c - -40}{12\Omega} + \dfrac{V_c}{25\Omega} + \dfrac{V_c - V_d}{20\Omega} + 5A = 0$

KCL @ V_d: $\dfrac{V_d - V_c}{20\Omega} + \dfrac{V_d - V_b}{40\Omega} = 5A + 7.5A$

$V_b = -84\ V \qquad V_c = -10\ V \quad V_d = 132\ V$

$V_{ab} = V_T = 84\ V$

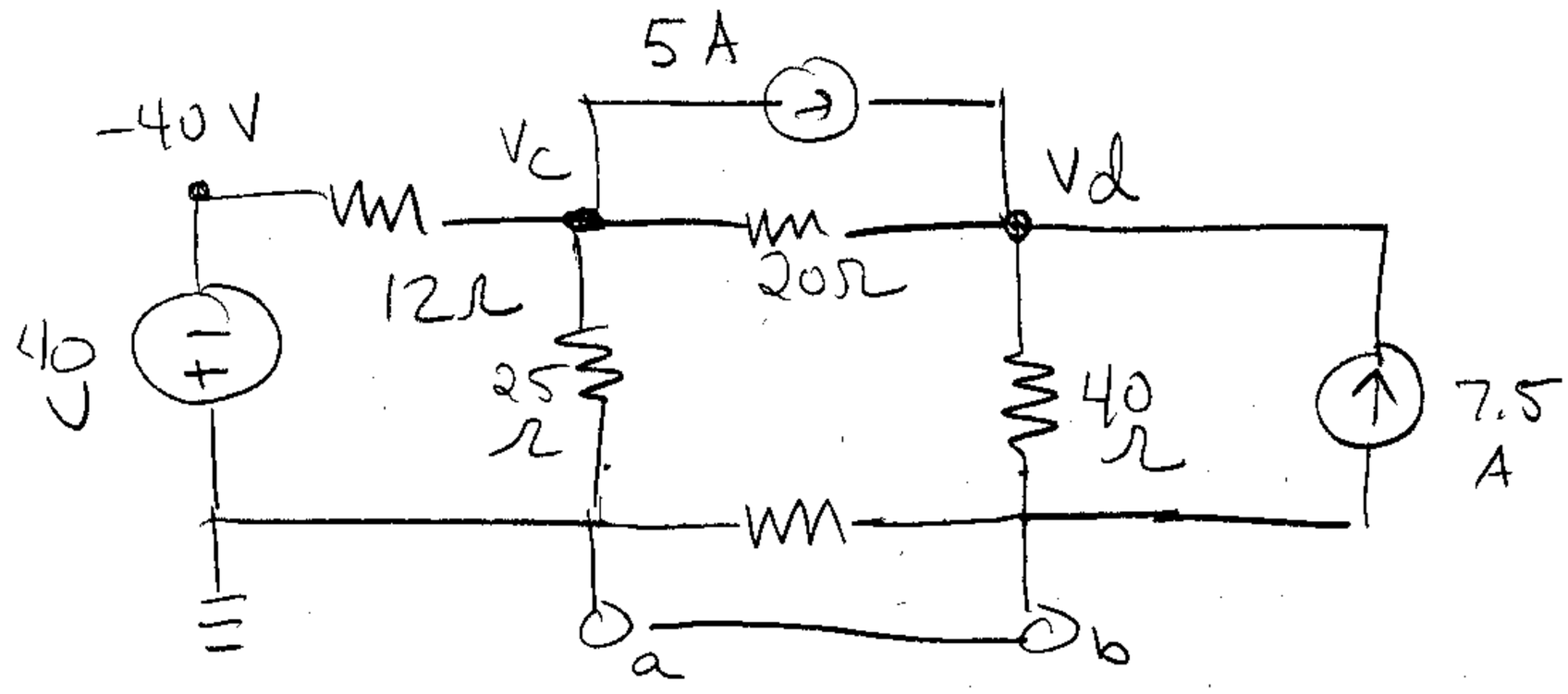

KCL @ V_c: $\dfrac{V_c - -40}{12\Omega} + 5A + \dfrac{V_c}{25\Omega} + \dfrac{V_c - V_d}{20\Omega} = 0$

KCL @ V_d: $\dfrac{V_d - V_c}{20\Omega} + \dfrac{V_d}{40\Omega} = 5A + 7.5A$

$V_c = 0\ V \qquad V_d = 166\ 2/3\ V$

$I_N + 7.5A = \dfrac{V_d}{40} \qquad I_N = -3\ 1/3\ A$

$R_T = R_N = -\dfrac{V_T}{I_N} = 25.2\Omega$

Method 2: Alternative R_T calculation:

Turn off independent sources

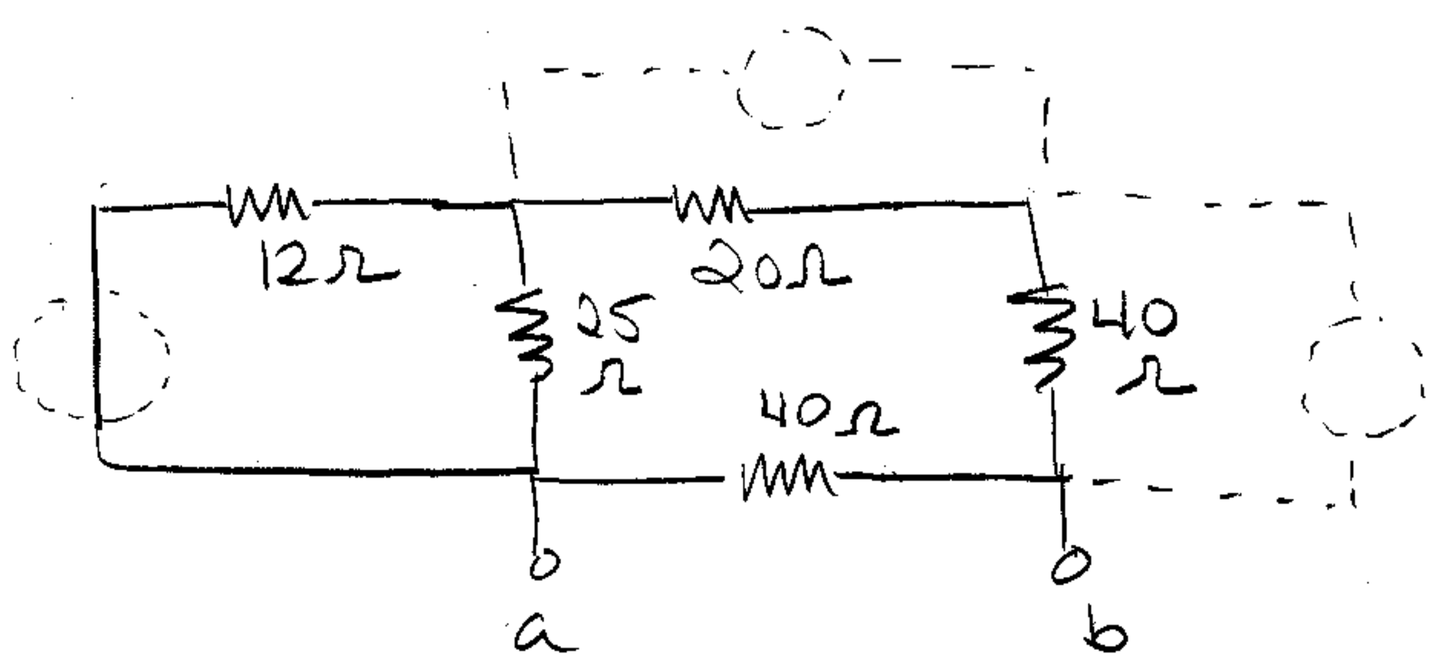

$R_{eq} = R_T = 25.2\ \Omega$

Method 3: Source Transformations

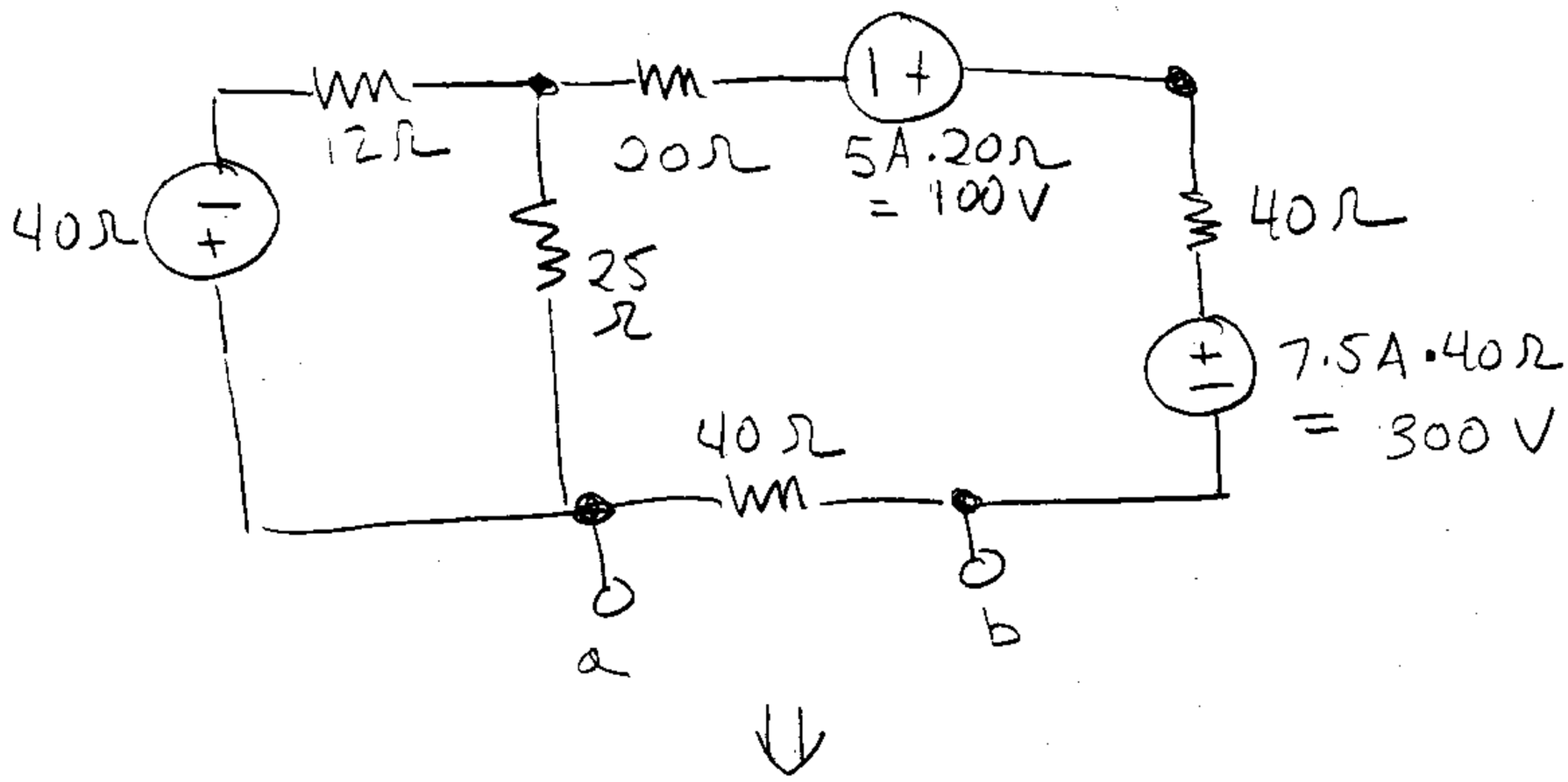

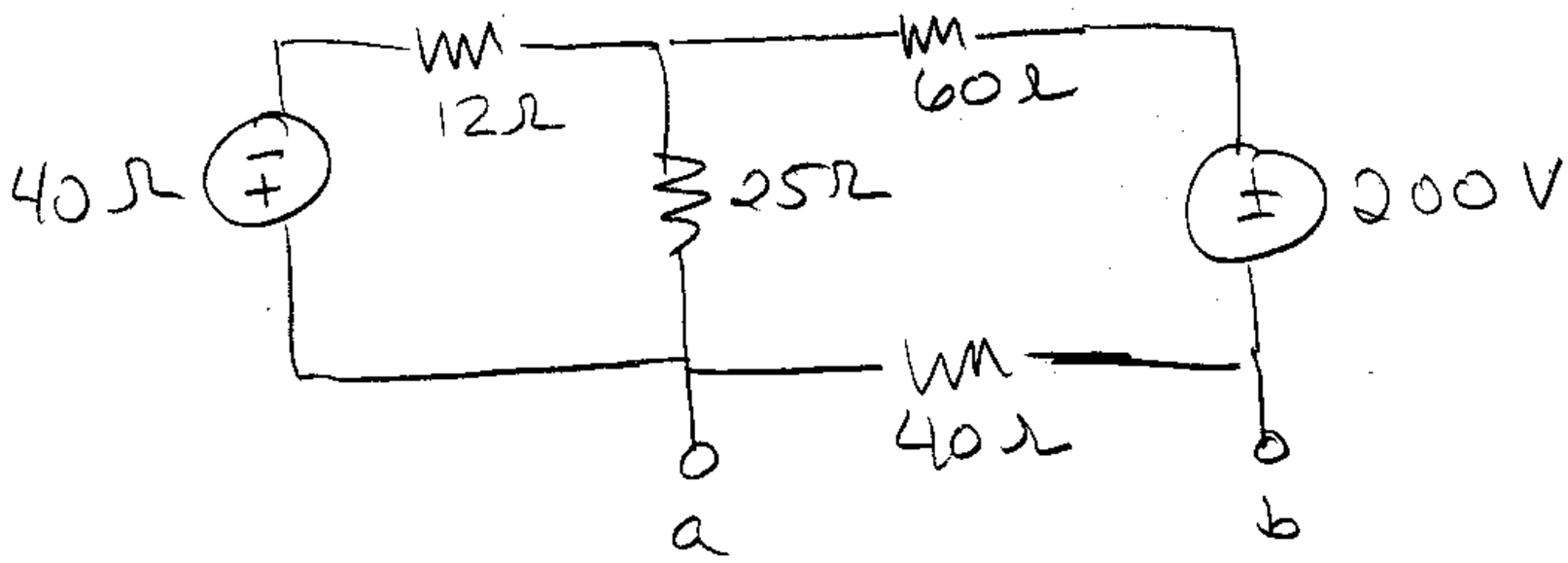

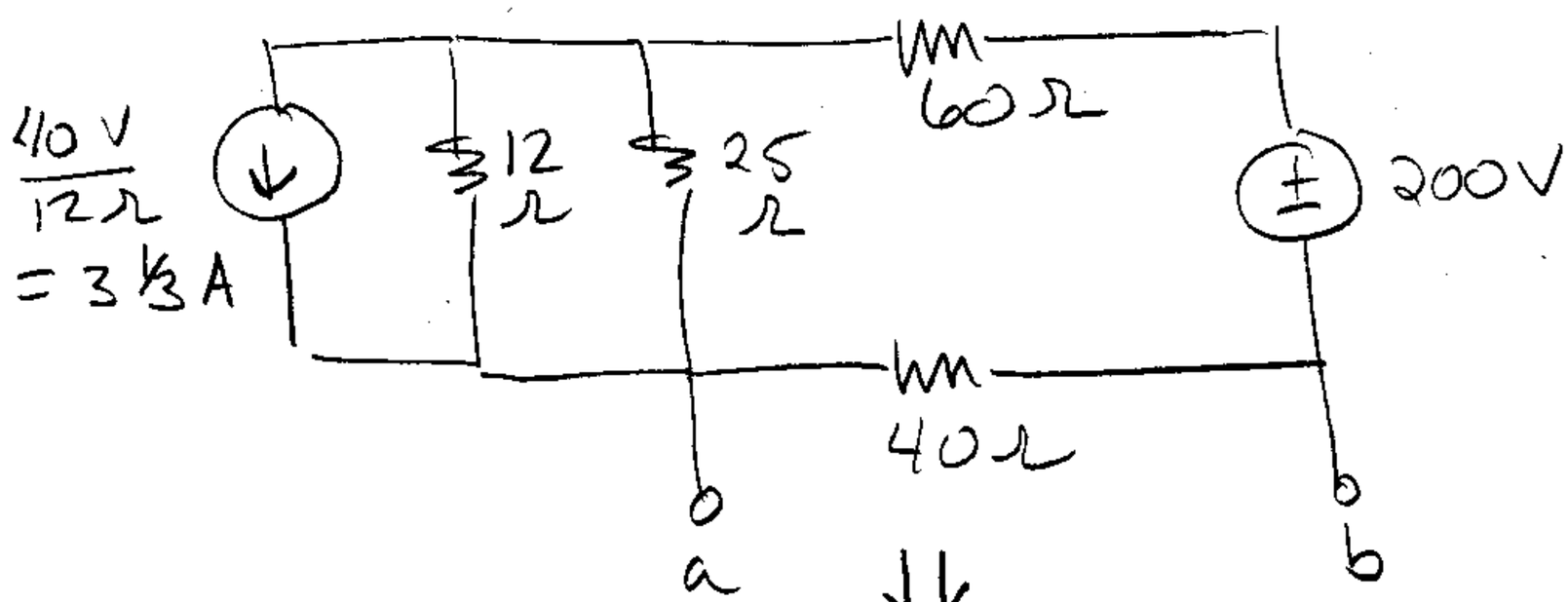

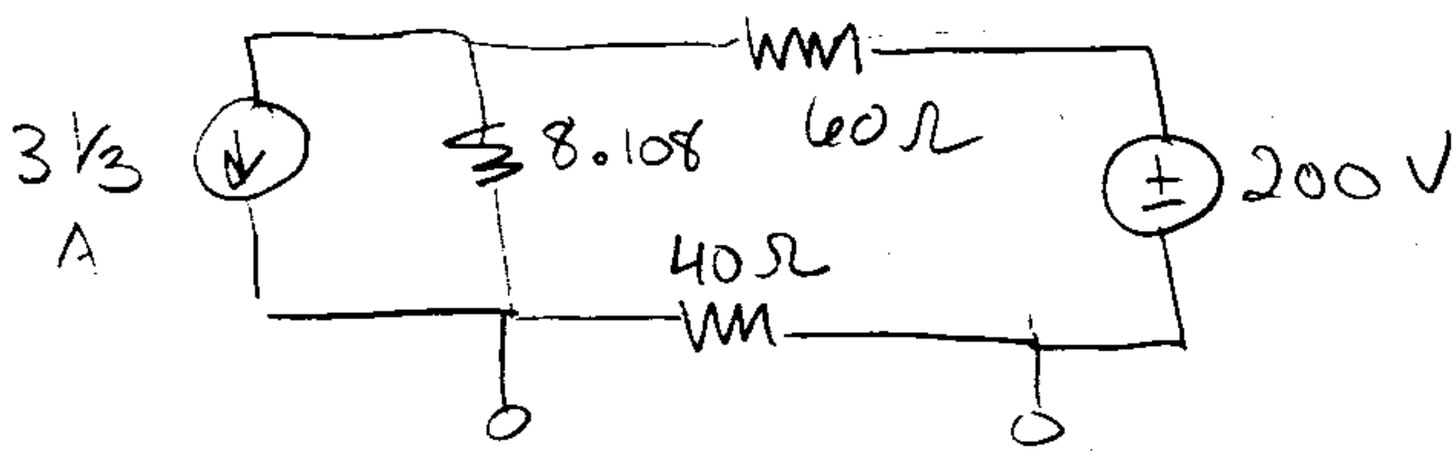

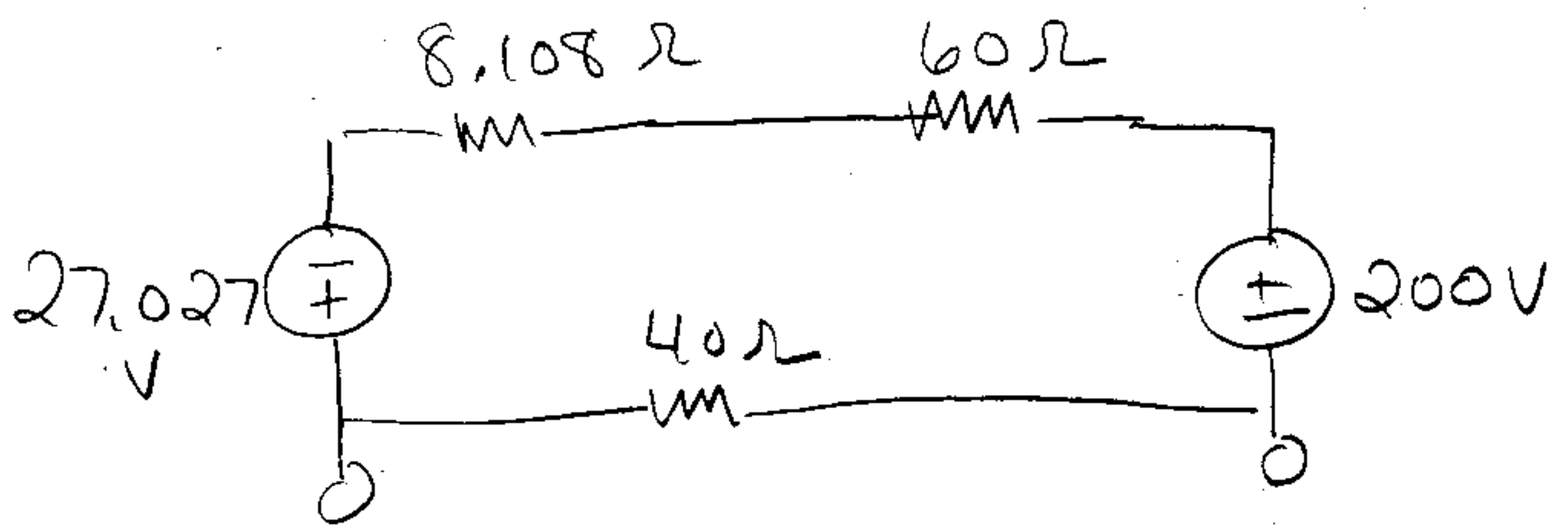
8.108 Ω
60 Ω
27.027 V
200 V
40 Ω

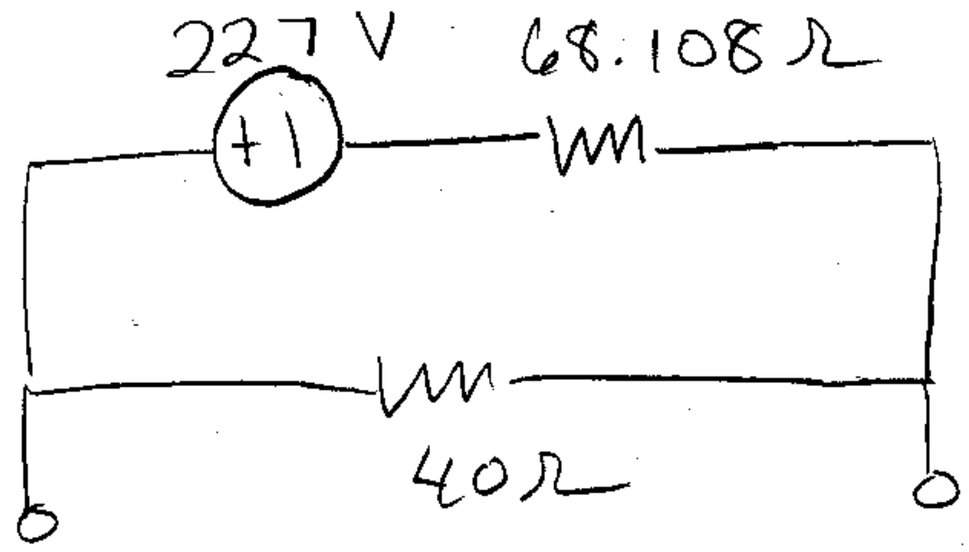
227 V
68.108 Ω
40 Ω

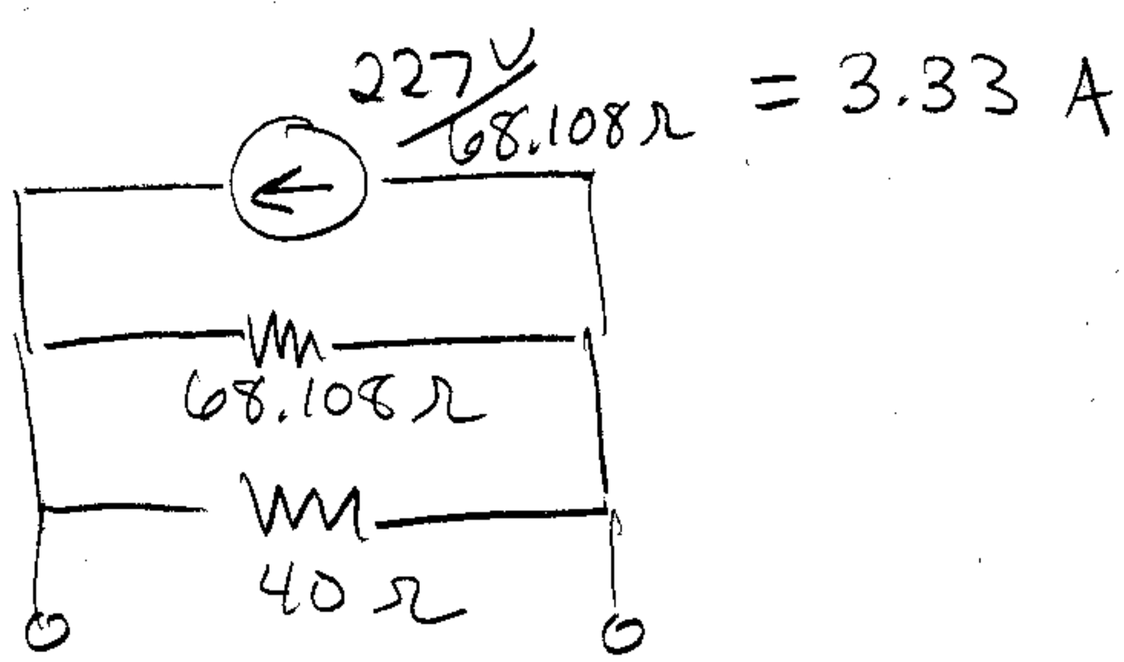
227 V / 68.108 Ω = 3.33 A
68.108 Ω
40 Ω

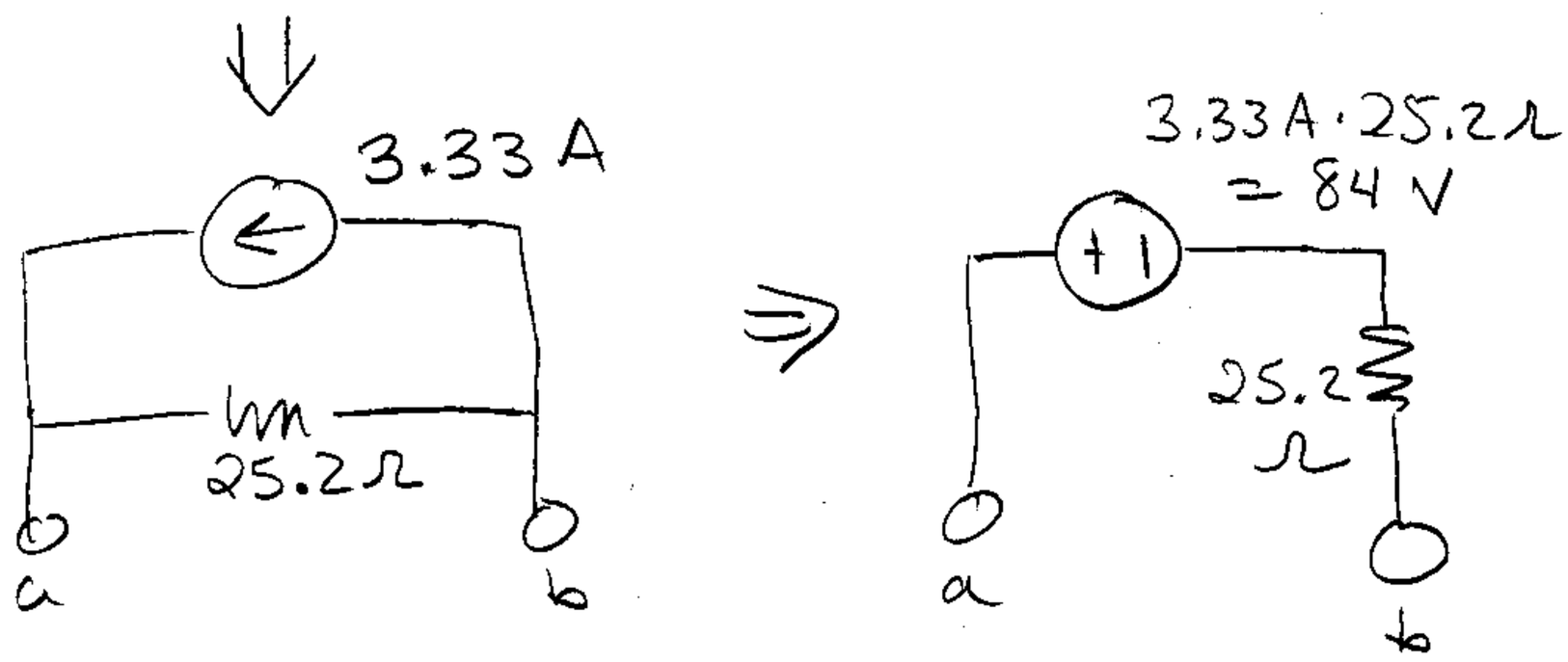
3.33 A
25.2 Ω
a
b
3.33 A · 25.2 Ω
= 84 V
25.2 Ω
a
b

Problem 4:

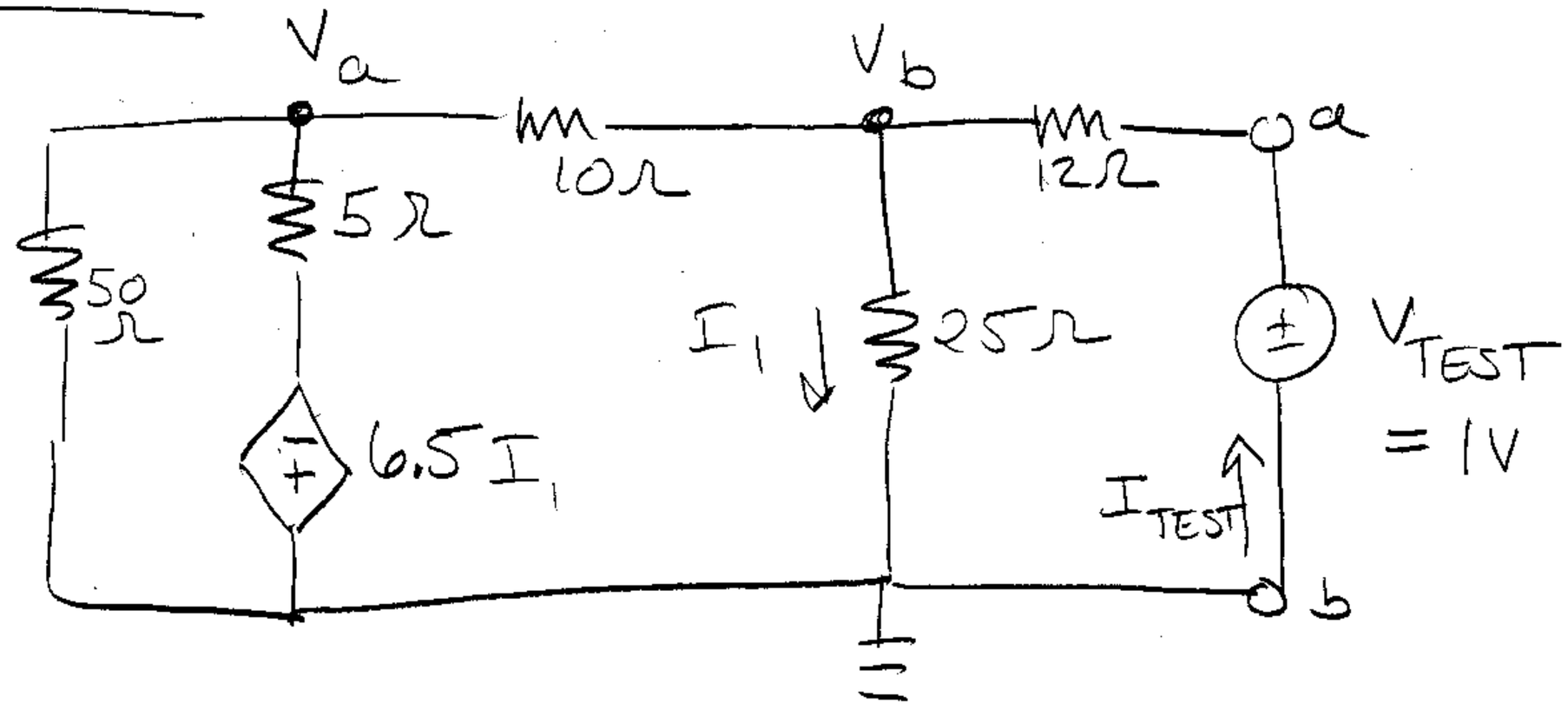

Nodal analysis:

$I_1 = V_b/25$

KCL @ V_a: $\dfrac{V_a}{50\Omega} + \dfrac{V_a - -6.5I_1}{5\Omega} + \dfrac{V_a - V_b}{10\Omega} = 0$

KCL @ V_b: $\dfrac{V_b - V_a}{10\Omega} + \dfrac{V_b}{25\Omega} + \dfrac{V_b - 1V}{12\Omega} = 0$ ($1V = V_{TEST}$)

$V_a = 60\,mV \qquad V_b = 400\,mV$

$I_{TEST} = \dfrac{V_{TEST} - V_b}{12\Omega} = 50\,mA$

$R_T = R_N = \dfrac{V_{TEST}}{I_{TEST}} = \dfrac{1V}{50mA} = 20\Omega$

$V_T = 0\,V \qquad I_N = 0\,A$

Problem 5: No, I cannot find the Thevenin equivalent. This measurement gives me only 1 point on the I-V line. (If there were no independent sources, then the origin would be a 2nd point.)