EE43/EE100--Lab #5
RC Filters Guide

I. Introduction

In this lab you will determine the input-output characteristics of an RC filter, and then use PSpice to simulate the RC filter behavior.

RC Filter Characteristics

Figure 1 below shows an RC filter connected to a sinusoidal voltage source. This circuit is termed a two-port circuit (Fig. 2) where the voltage source produces the input voltage V_{in} and the output voltage V_{out} appears across resistor R.

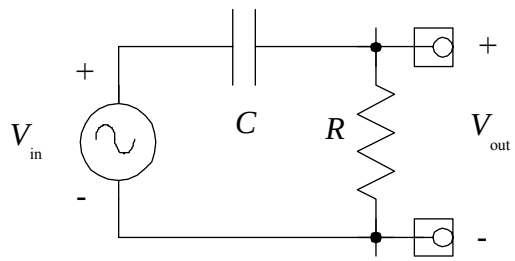

Figure 1: An RC filter with a series capacitor and output resistor R.

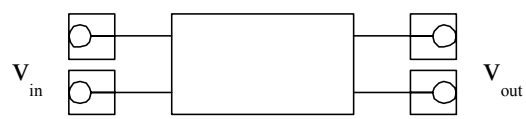

Figure 2: A two-port circuit.

Recall that we customarily represent an AC voltage as a periodic function of time, such as $V(t) = V_0\cos(\omega t)$ where V_0 is the amplitude of the voltage, t is time, and ω is the angular frequency, whose units are radians per second. The angular frequency is related to frequency, f, measured in Hertz, by $\omega = 2\pi f$. For example, if the frequency, f, of the ordinary power line voltage in the U.S. is 60 Hz, then the associated angular frequency, ω, is 377 radians/s ($2\pi\times60$).

Transfer Function

A two-port circuit is characterized by its transfer function, whose magnitude is defined as $|\mathbf{V_{out}}/\mathbf{V_{in}}|$, where $\mathbf{V_{out}}$ and $\mathbf{V_{in}}$ are phasor voltages (as indicated by the boldface type). The variation of the transfer function with frequency characterizes the circuit, whether the circuit is an amplifier (does it amplify high frequencies more than low frequencies?) or a filter (does the filter pass the low frequencies or the high frequencies better?).

If you analyze the RC circuit of Fig. 1 using Kirchhoff's voltage law, the phasor voltages $\mathbf{V_{out}}$ and $\mathbf{V_{in}}$, the resistance R and the impedance of the capacitor $\mathbf{Z_C} = 1/j\omega C$, you can show that the magnitude of the transfer function is

$$\left|\frac{\boldsymbol{V}_{out}}{\boldsymbol{V}_{in}}\right| = \frac{\omega RC}{\sqrt{1+(\omega RC)^2}}$$

An approximate log-log plot of transfer function magnitude vs. frequency is shown in Figure 3. The filter characteristic has been simplified to appear as two lines that intersect at the angular frequency

for which ωRC = 1, or ωτ = 1, where τ is the time constant RC for this circuit. If plotted precisely, the characteristic would transition smoothly from the upward sloping line to the horizontal line, but for many purposes the two-straight-line approximation is adequate. This circuit is called a *high-pass filter*, since for frequencies above ω = 1/RC the output voltage equals the input voltage.

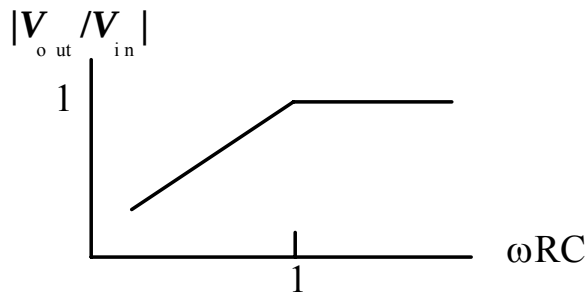

Figure 3: Log-log plot of transfer function magnitude vs. angular frequency times RC, for the circuit of Fig. 1.

If we reverse the positions of R and C in the filter circuit (Figure 4), we obtain the transfer function:

$$\left|\frac{\boldsymbol{V}_{\text{out}}}{\boldsymbol{V}_{\text{in}}}\right| = \frac{1}{\sqrt{(\omega RC)^2 + 1}}$$

This transfer function results in a *low-pass filter*, as frequencies below ω = 1/RC yield an output voltage that has an amplitude equal to the input voltage (Fig. 5).

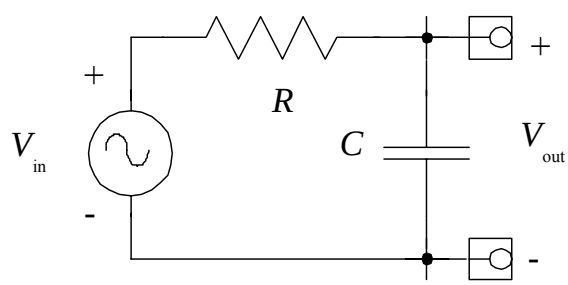

Figure 4: Circuit with a series resistor R and the capacitor C as the output element.

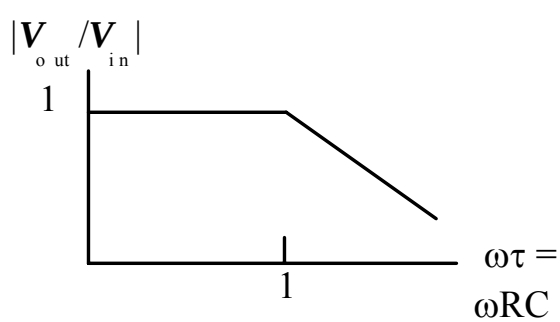

Figure 5: Log-log plot of transfer function magnitude vs. angular frequency times RC for the circuit of Fig. 4.

II. Experimental Section

Part 1: Determining RC Filter Characteristics

In this part of the experiment, you will make measurements to observe the filtering effects of an RC circuit.

1. Connect a 10-kΩ resistor and a (non-polarized) 0.1 μF capacitor in series with the signal generator, making sure that your oscilloscope ground and the signal generator ground are connected together (see Fig. 1 for the circuit configuration). Set the signal generator to output a 2 Vpp sine wave.
2. Measure and plot the amplitude of the voltage across the resistor versus frequency on log-log graph paper.
3. Measure and plot the phase of the voltage across the resistor versus frequency on semilog graph paper. Use the input signal as a reference (V_{in} has a phase of zero degrees).
4. Repeat Step 1 using a square wave input. Vary the frequency and observe the effects of the filter circuit on the output. Qualitatively draw graphs at f = 100 Hz, 1 kHz, and 10 kHz of the square wave input and the output.
5. Change your circuit so that it looks like Figure 4. Set the signal generator to output a 2 Vpp sine wave. Measure and plot the amplitude of the voltage across the capacitor versus frequency on log-log graph paper. Indicate the 3-dB point on your graph.
6. Measure and plot the phase of the voltage across the capacitor versus frequency on semilog graph paper. Use the input signal as a reference (V_{in} has a phase of zero degrees).
7. Repeat Step 5 using a square wave input. Vary the frequency and observe the effects of the filter circuit on the output. Qualitatively draw graphs at f = 100 Hz, 1 kHz, and 10 kHz of the square wave input and the output.

Part 2: Simulating an RC Filter

In this part, we will use PSpice to simulate the RC filter characteristics that you just measured.

8. Create a folder on your computer to save your simulation files, such as **C:\your_name**
9. Start the Capture program (Go to **Start → Programs → OrCAD Family Release 9.2 Lite Edition → Capture Lite Edition**.)
10. Start a new project by choosing **File → New → Project…** from the menu bar. Type in the project name in the **Name** field: rc_filter. Choose the **Analog or Mixed A/D** option, and make sure the path in the **Location** field points to your folder. When everything is set up, click on **OK**.
11. When the **Create PSpice Project** window appears, click on **Create a blank project**, and then click **OK**.
12. To create the schematic, we will be placing parts in the **SCHEMATIC1 : PAGE1** window. However, before we can place the parts we want, we may need to set up libraries for this project that contain the elements we need. Choose **Place → Part…** from the menu bar to bring up the **Place Part** dialog box.
13. If no parts are available yet, click on **Add Library…** and select **analog.olb** by double-clicking it (the path to this file is C:\Program Files\OrcadLite\Capture\Library\PSpice).
14. Repeat Step 13 to add the **source.olb** library.
15. Build the circuit shown in Figure 6. Use the element **VAC** under the **SOURCE** library as the voltage source. Don't forget to adjust the values of the circuit elements.

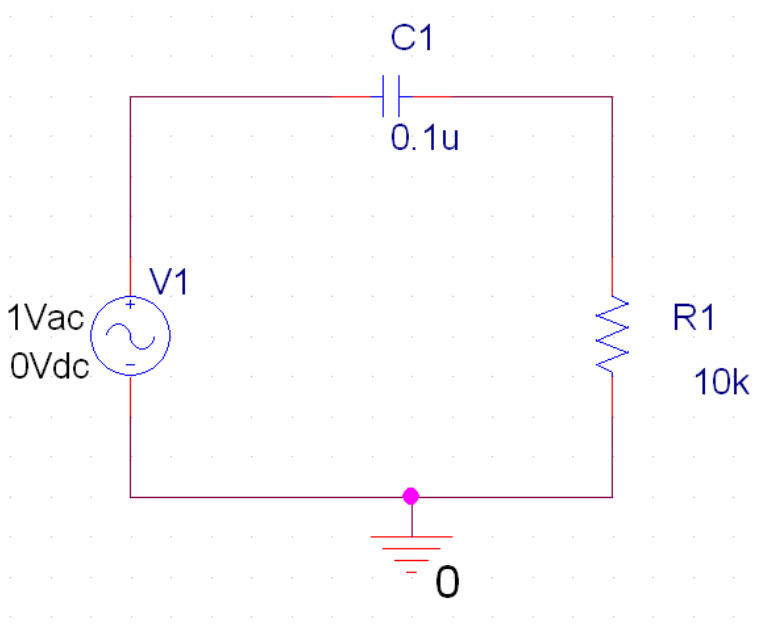

Figure 6: RC filter circuit

16. We will add net aliases to label the input and output nodes of the circuit. Go to **Place → Net Alias…** from the menu bar to bring up the **Place Net Alias** dialog box (Fig. 7). Enter **in** as the alias name, then click **OK**. Now click the wire at a point between **C1** and **V1** to place the alias. Press **ESC** to end the mode.

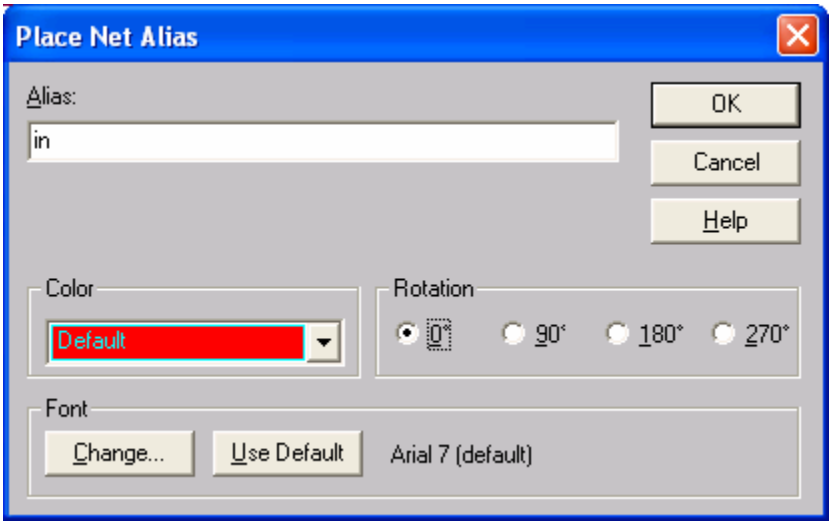

Figure 7: Place Net Alias dialog box

17. Repeat Step 16 to add a net alias called **out** at the point between **C1** and **R1**. Your circuit should look like Figure 8.

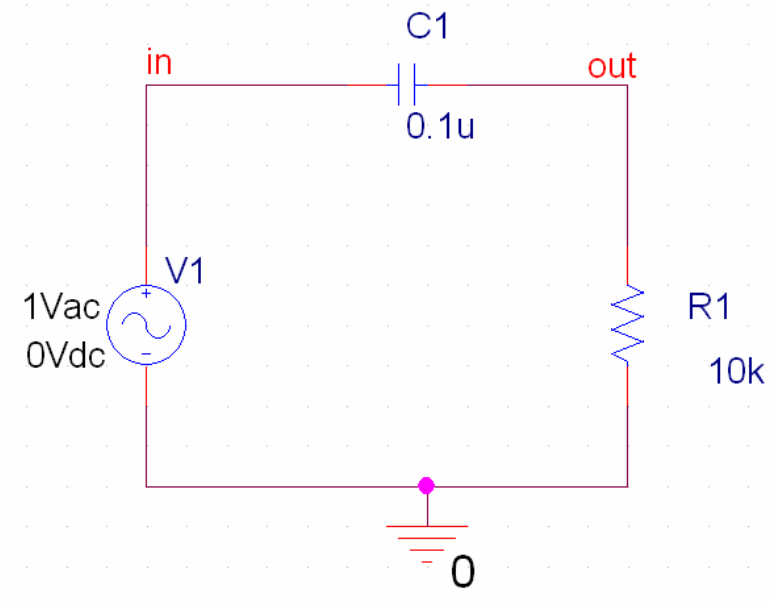

Figure 8: Net aliases added to RC circuit

18. Create a new simulation profile (**PSpice → New Simulation Profile**) called **frequency_sweep**. In the **Simulation Settings** window, choose **AC Sweep/Noise** as the analysis type. Select **Logarithmic** and **Decade** in the **AC Sweep Type area**. Set the **Start Frequency** to 10 Hz, the **End Frequency** to 100 kHz, and **Points/Decade** to 100 (Fig. 9). This will simulate the circuit in the frequency range from 10 Hz to 100 kHz, with 100 data points per decade.

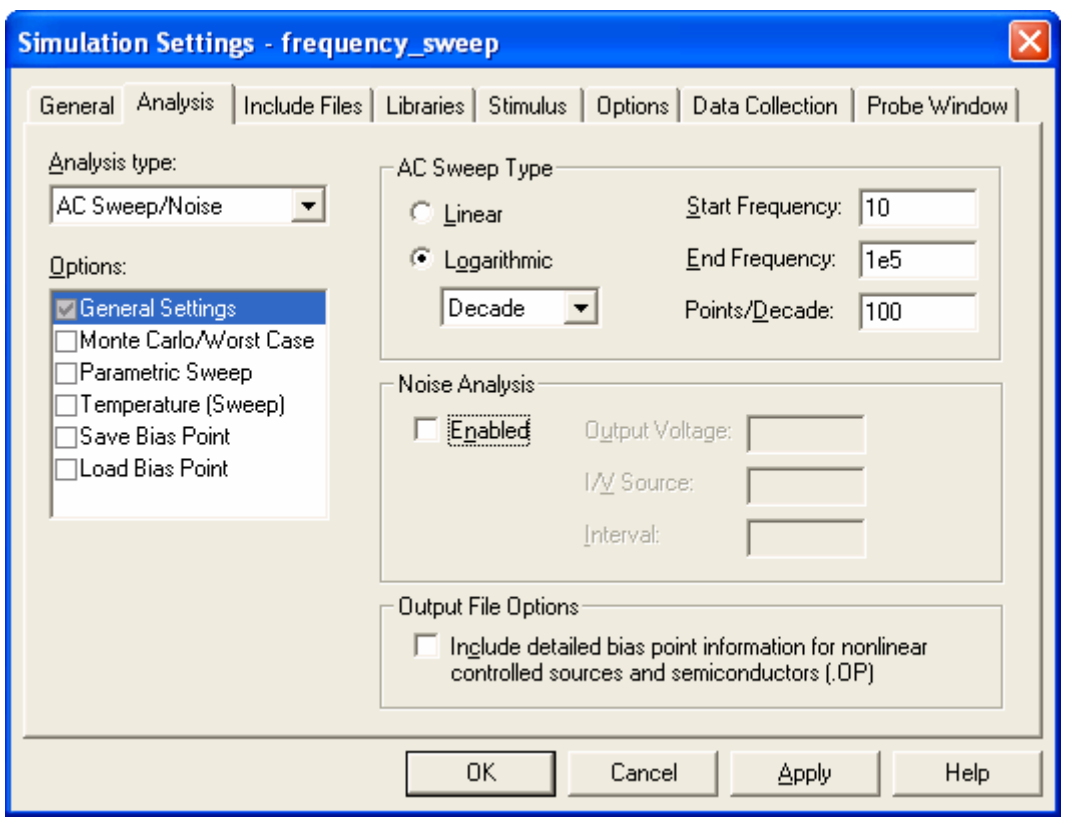

Figure 9: Simulation settings

19. Run the simulation (**PSpice → Run**). The simulation results window will pop up, but the graph will be blank. We need to add the traces that we want to view to the graph. Choose **Trace → Add Trace…** from the menu bar, which will bring up the **Add Traces** window (Fig. 10). Add the expression we want to plot in the Trace Expression field: **DB(V(out)/V(in))**. This tells the program to plot the result of (voltage at net alias **out** / voltage at net alias **in**) in decibel units, as a function of frequency. Click **OK** to view the result. Print the simulated result and include in your lab report. Does the simulated result match your measured result?

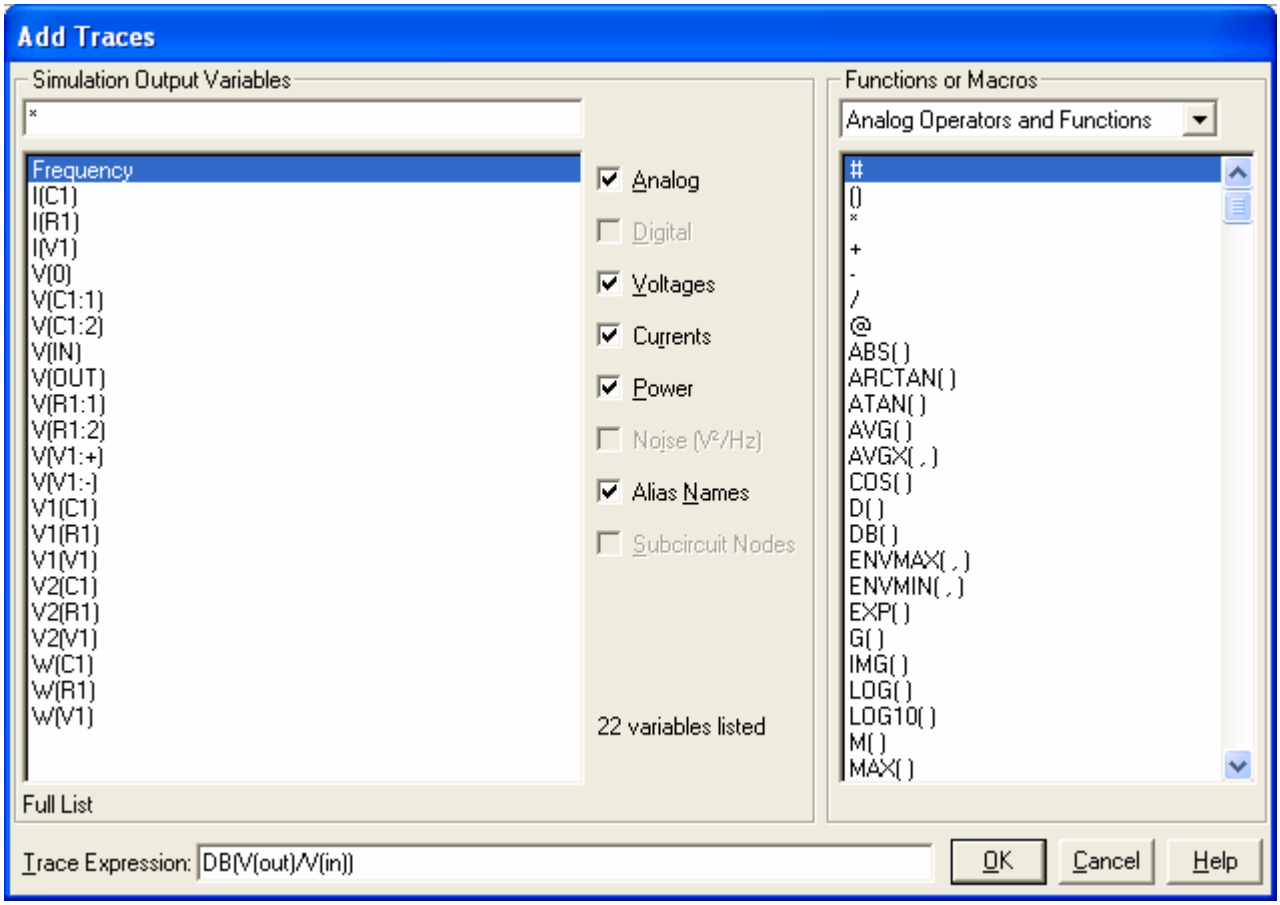

Figure 10: The **Add Traces** window

20. Remove the previous trace by choosing **Trace → Delete All Traces**. Add another trace using the procedure of Step 19. We will plot the phase difference of the output and input, by using the following expression: **P(V(out)/V(in))**. Print the simulated result and include in your lab report. Does the simulated result match your measured result?
21. Repeat the simulations in Steps 18 to 20, using the circuit shown in Figure 11. Print the results and include in your lab report.

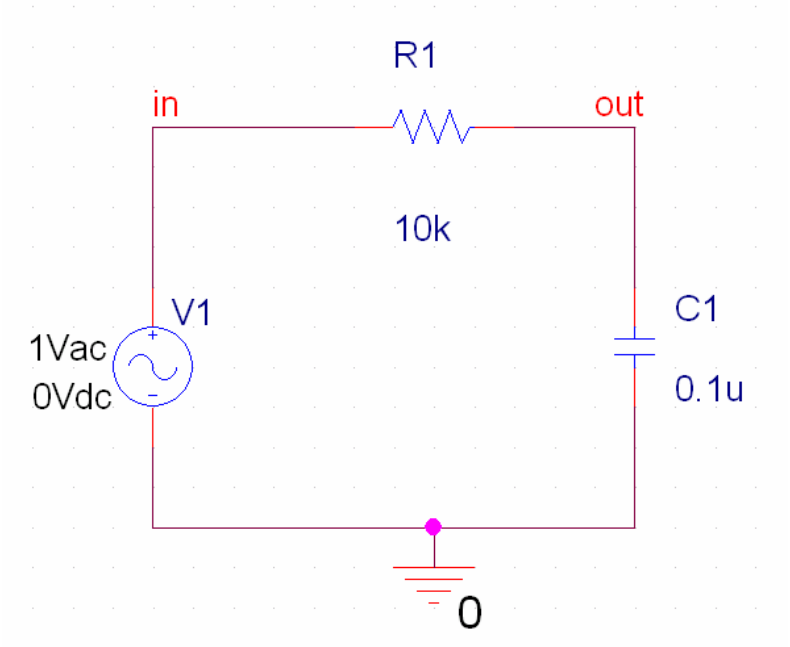

Figure 11: Another RC filter configuration