EE 40, Spring 2007
Final Exam
Prof. Chang-Hasnain

May 17, 2007
Total Time Allotted: 180 minutes
Total Points: 200

1. This is a closed book exam. However, you are allowed to bring three pages (8.5" x 11") single-sided notes.
2. No electronic devices, i.e. calculators, cell phones, computers, etc.
3. SHOW all the steps on the exam.
4. **Remember to put down units.** Points will be taken off for answers without units.

Last (Family) Name:_____Perfect_____

First Name: _____Peter_____

Student ID: _____31415927_____Signature: _____PP_____

MAKE SURE YOU ARE IN EE 40!!!

Problem 1 (50 pts)	
Problem 2 (16 pts)	
Problem 3 (20 pts)	
Problem 4 (26 pts)	
Problem 5 (50 pts):	
Problem 6 (14 pts)	
Problem 7 (24 pts)	
Total	200

1. (50 pts) **MOS Circuit:**
The transistor is an NMOS with $K = 1mA/V^2$ and $V_{to} = 1V$. Let $V_{DD} = 10V$, $R_1 = 700k$, $R_2 = 300k$, $R = 70k$, $R_S = 1k$, $R_L = 4k$. Assume the capacitors and inductors are large.

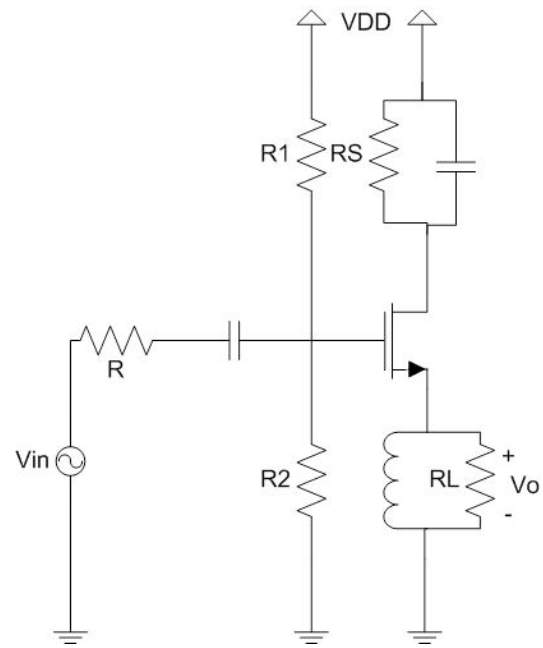

(a) (10 pts) Use DC analysis. **Draw a load-line** on the following I_{DS}-V_{DS} characteristic. (Hint: How do capacitors behave at DC? What about inductors?).

At DC: Capacitor $\rightarrow$ open
Inductor $\rightarrow$ short

The load-line only considers Rs:

$$V_{DSQ} = V_{DD} - I_{DSQ} R_S \Rightarrow$$

$$I_{DSQ} = \frac{V_{DD} - V_{DSQ}}{R_S}$$

$$= \frac{10V}{1k\Omega} - \frac{V_{DSQ}}{1k\Omega}$$ (load-line equation)

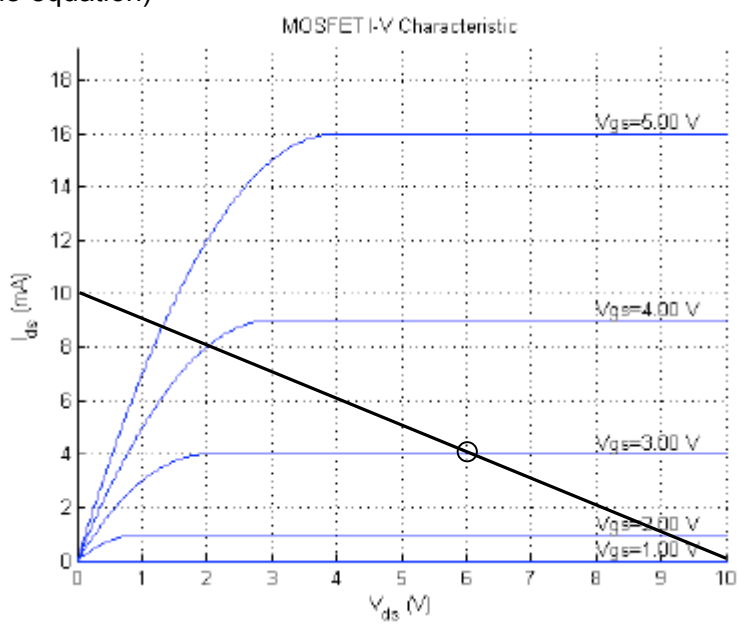

(b) (6 pts) What are the values of V_{GSQ}, V_{DSQ}, and I_{DSQ}?

At DC: Capacitor $\rightarrow$ open

By voltage divider, $V_{GSQ} = V_G = \frac{R_2}{R_1 + R_2} V_{DD} = \frac{300\,k\Omega}{700\,k\Omega + 300\,k\Omega} \cdot 10V = 3V$

From the load line,

$V_{DSQ} = 6\,V$

$I_{DSQ} = 4\,mA$

(b) (8 pts) What are g_m and r_d? (Remember to put down units!)

$$g_m = \frac{\partial i_D}{\partial v_{GS}} = 2K(V_{GSQ} - V_{to})$$
$$= 2 \cdot (1mA/V^2)(3V - 1V) = 4mA/V = 4mS$$

or:

$$g_m = 2\sqrt{KI_{DSQ}}$$
$$= 2 \cdot \sqrt{(1mA/V^2)(4mA)} = 4mS$$

$r_d = \infty$ (Slope of ID vs. VDS is 0 at Q-point) $\frac{1}{r_d} = \left.\frac{\partial i_D}{\partial v_{DS}}\right|_{Q\,point} = 0$

(c) (8 pts) Draw the small signal model for the circuit. (Hint: How do capacitors/inductors behave at high frequencies? What is DC voltage in AC small signal model?)

AC: Capacitor → short, Inductor → open
V_{DD} → AC ground

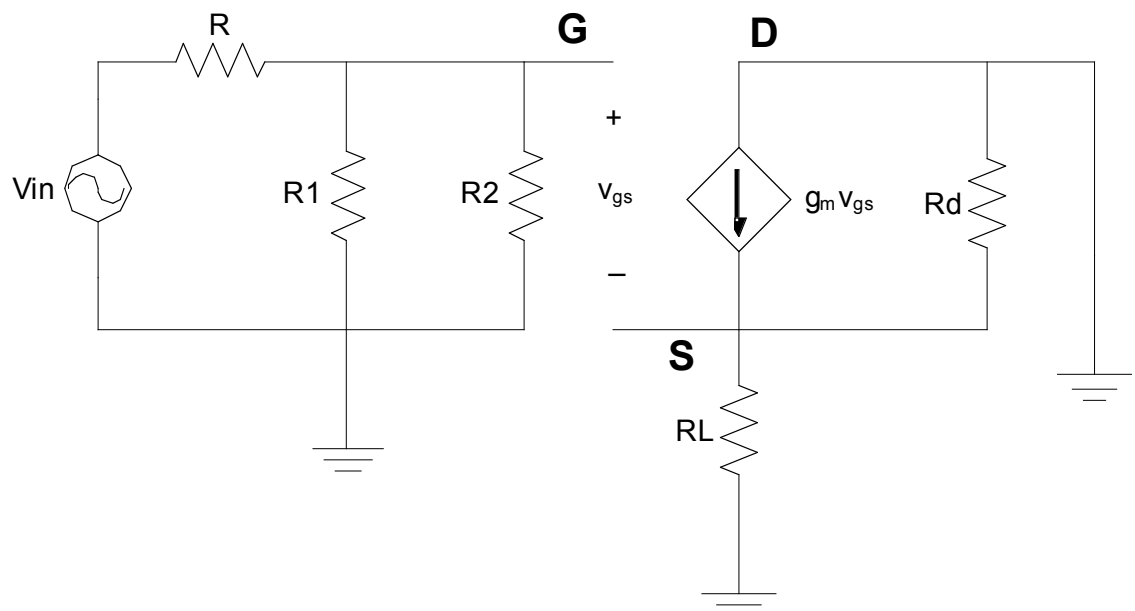

(d) (8 pts) Find the voltage gain A_v.

Since Rd is infinite,

$$v_{out} = g_m v_{gs} R_L$$
$$v_g = v_{gs} + v_{out}$$
$$= \frac{v_{out}}{g_m R_L} + v_{out} = v_{out}\left(1 + \frac{1}{g_m R_L}\right)$$
$$\frac{v_{out}}{v_g} = \left(\frac{g_m R_L}{1 + g_m R_L}\right)$$

$$v_{out} = g_m v_{gs} R_L$$

$$v_g = \frac{R_1 // R_2}{R + R_1 // R_2} v_{in}$$

$$= \frac{700k\Omega // 300k\Omega}{70k\Omega + 700k\Omega // 300k\Omega} v_{in}$$

$$= \frac{210k\Omega}{70k\Omega + 210k\Omega} v_{in} = \frac{3}{4} v_{in}$$

$$A_V = \frac{v_{out}}{v_{in}} = \frac{v_g}{v_{in}} \cdot \frac{v_{out}}{v_g} = \frac{3}{4}\left(\frac{g_m R_L}{1 + g_m R_L}\right)$$

$$= \frac{3}{4}\left(\frac{4mS \cdot 4k\Omega}{1 + 4mS \cdot 4k\Omega}\right) = \frac{3}{4}\left(\frac{16}{17}\right) = \frac{12}{17}$$

(e) (5 pts) Find R_{in}, the input resistance.

$$R_{in} = R + R_1 // R_2$$

$$= 70k\Omega + 700k\Omega // 300k\Omega = 70k\Omega + 210k\Omega$$

$$= 280k\Omega$$

(f) (5 pts) Find R_{out}, the output resistance.

Zero the source v_{in}. The resistance RL sees, by looking into the source is found by:
Applying test voltage, v_t, at v_{out}: $v_{gs} = -v_t$

KCL:

$$g_m v_{gs} + i_t = 0$$

$$i_t = g_m v_t$$

$$R_{out} = \frac{v_t}{i_t} = \frac{1}{g_m}$$

$$= (4mS)^{-1} = 250\Omega$$

2. (16 pts) **CMOS Logic**

(a) (8 pts) Fill in the truth table and express the function of this logic gate in sum-of-products form.

(b) (8 pts) Fill in the PMOS pull-up network to complete this CMOS logic gate.

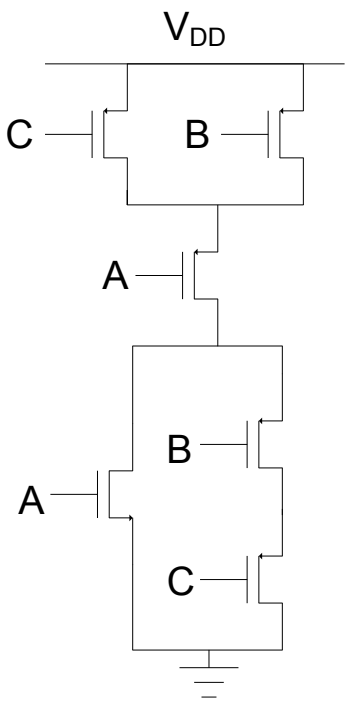

A	B	C	Out
0	0	0	1
0	0	1	1
0	1	0	1
0	1	1	0
1	0	0	0
1	0	1	0
1	1	0	0
1	1	1	0

HI input: NMOS on, PMOS off
LO input: NMOS off, PMOS on

Out = (A+BC)' = A'B' + A'C'
Truth-table:

3. (20 pts) **Diode circuit:** Use ideal piece-wise diode model with a threshold voltage of **0.6 volts**.

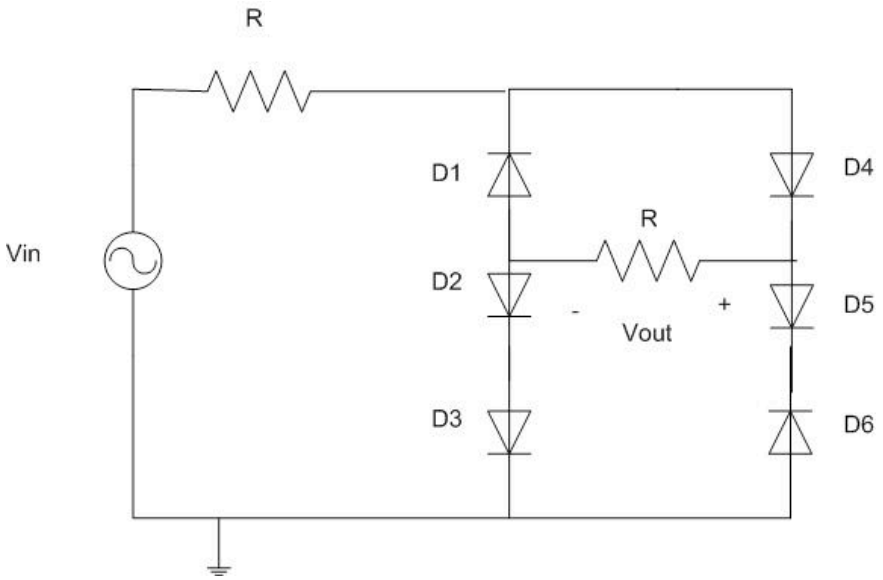

a) (5 pts) Determine all the V_{in} range(s) for which there is current through the circuit.

V_{in} > .6 *3 =1.8V.

b) (5 pts) What is the value of V_{out} when V_{in}= 5 V?

$V_{out} = (V_{in}-1.8)/2 = 1.6V$

c) (5 pts) What is the value of V_{out} when V_{in}= -5 V?

$V_{out} = 0$

d) (5 pts) Draw the V_{out} on the same graph for V_{in}= 5cos(2*π*t)

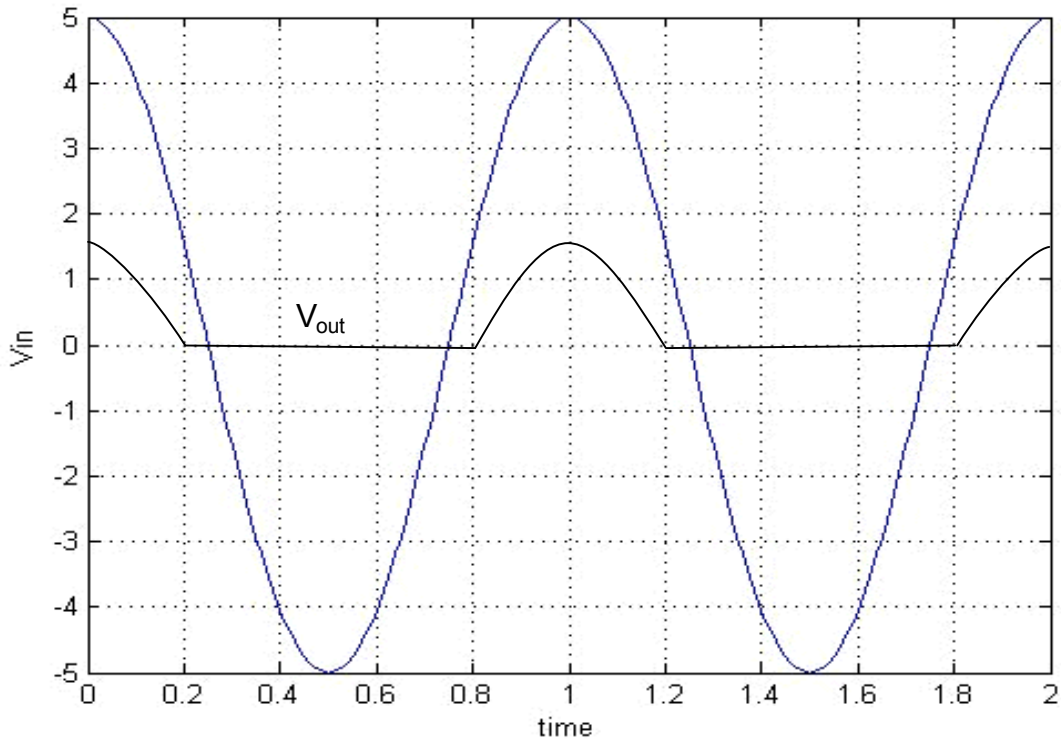

4. (26 pts) **Op-amp circuits** (Hint: this is a negative feedback case.)

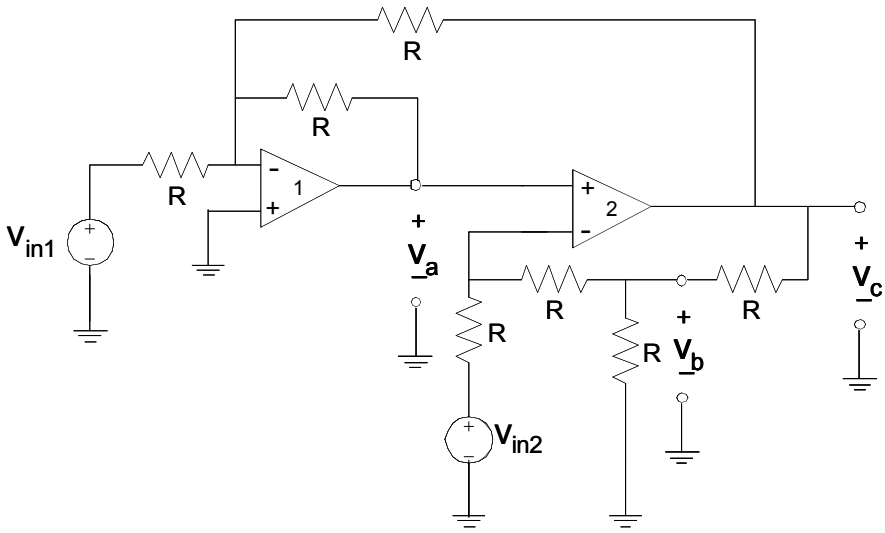

(a) (10 pts) Derive one equation relating V_a and V_c to V_{in1} (Hint: analyze the circuit around op-amp 1).

$$\frac{-V_{in}}{R} = \frac{V_a}{R} + \frac{V_c}{R}$$

(b) (10 pts) Derive **two equations** relating V_a, V_b and V_c to V_{in2} (Hint: analyze the circuit around op-amp 2).

$$\frac{V_c - V_b}{R} = \frac{V_b - V_{in2}}{2R} + \frac{V_b}{R}$$

$$\frac{V_b - V_{in2}}{2R} = \frac{V_b - V_a}{R}$$

(c) (6 pts) Solve V_a, V_b and V_c when V_{in1} = V_{in2} =3V.

$-3 = V_a + V_c$ (1pt)

$2V_c - 2V_b = V_b - V_{in2} + 2V_b \Rightarrow 2V_c - 5V_b = -3$

$V_b - V_{in2} = 2V_b - 2V_a \Rightarrow -3 = V_b - 2V_a$

Va = 1V
Vb = -1V
Vc = -4V

5. (50 pts) **Bode Plot Problem**

a) (i) (10 pts) Show that the transfer function of this circuit H_1 is of the form $H_1 = \frac{V_{01}}{V_{in1}} = \frac{j\frac{\omega}{\omega_1}}{1 + j\frac{\omega}{\omega_B}}$.

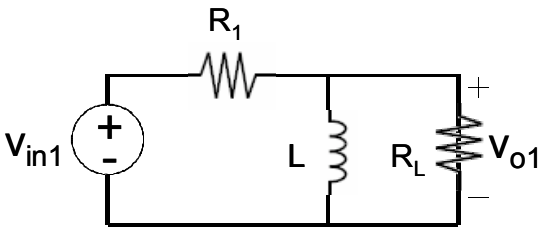

$$H = \frac{Z_L // R_L}{Z_L // R_L + R_1} = \frac{\dfrac{1}{\dfrac{1}{j\omega L} + \dfrac{1}{R_L}}}{\dfrac{1}{\dfrac{1}{j\omega L} + \dfrac{1}{R_L}} + R_1} = \frac{j\dfrac{\omega}{\dfrac{R_1}{L}}}{1 + j\dfrac{\omega}{\dfrac{R_1 R_L}{L(R_1 + R_L)}}}$$

(ii) (10 pts) Express ω_1 and ω_B in terms of R_1, L and R_L

$$\omega_1 = \frac{R_1}{L}$$

$$\omega_B = \frac{R_1 R_L}{L(R_1 + R_L)}$$

(iii) (10 pts) Given that R_1=10Ω, L=10mH, R_L= 10kΩ. Sketch the Bode magnitude (in dB) plot.
Label the axes, all important points and indicate the slopes.
(Hint: Make necessary approximation!)
break frequency at: 1000rad/s. slope = -20dB/s

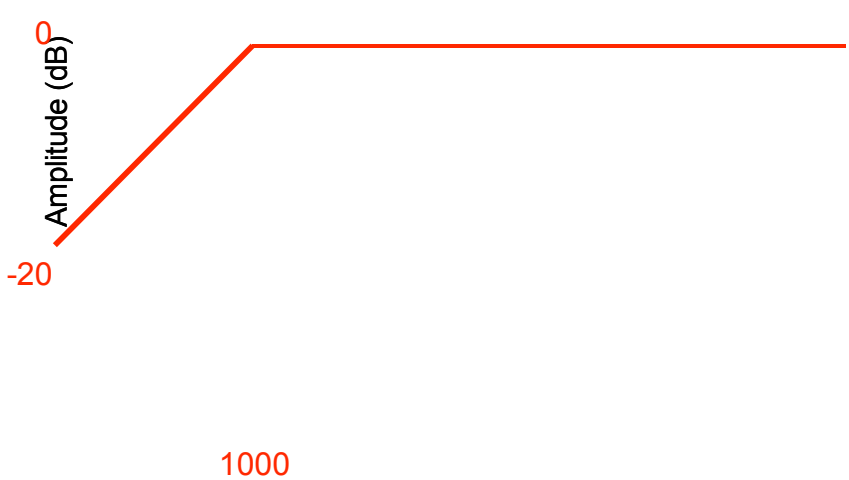

(b) (20 pts) Consider the circuit below. R_2=10kΩ, C=10nF.

(i) (5 pts) What is the transfer function $H_2=V_{02}/V_{in2}$?

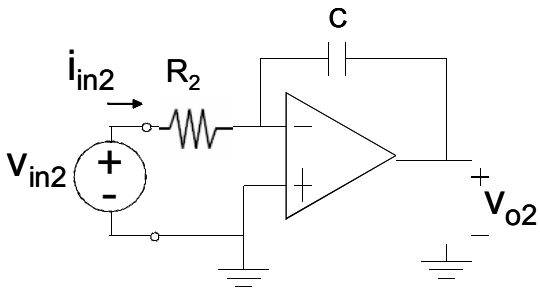

$$H = -\frac{1}{j\omega CR_2}$$

(ii) (10 pts) Sketch the Bode magnitude plot. **Label the axes, all important points and indicate the slopes.**

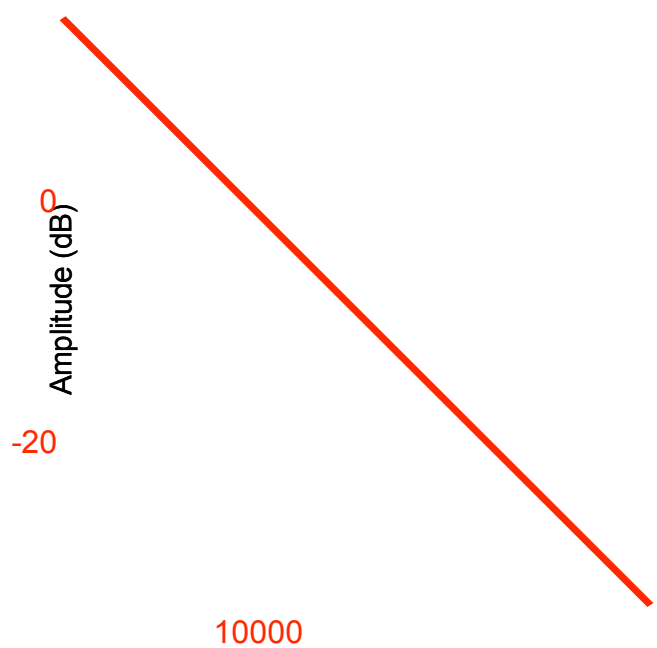

(iii) (5 pts) What is the input resistance of this circuit?

Input resistance is $V_{in2}/i_{in2}=R_2$

6. (14 pts) **Equivalent Circuit.** Consider the following circuit.

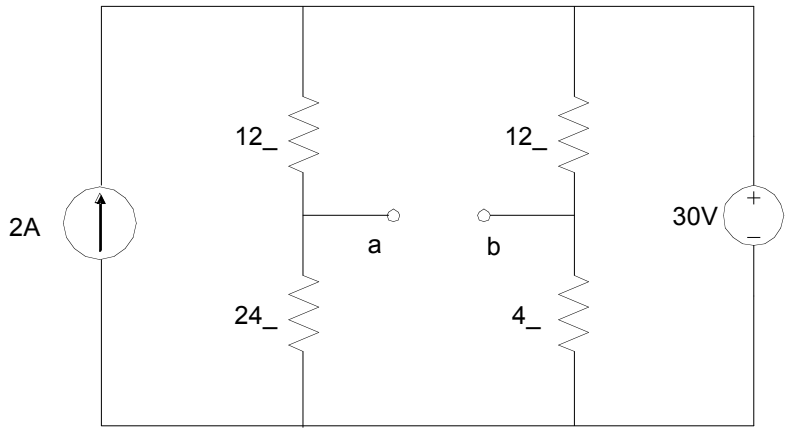

(a) (6 pts) Draw the Thévenin equivalent circuit for terminals a-b. What are the Thévenin voltage and resistance?

Rth = 11Ohms
Assume bottom node is ground,
Vth = Va-Vb = 20V-7.5V = 12.5V

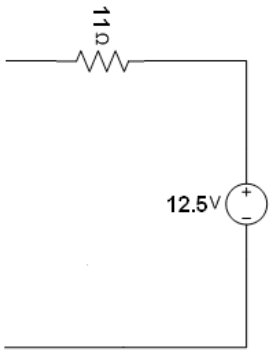

(b) (4 pts) Draw the Norton equivalent circuit for terminals a-b. What are the Norton current source and resistance?

Rth is still 11Ohms
Ith = 12.5/11 A

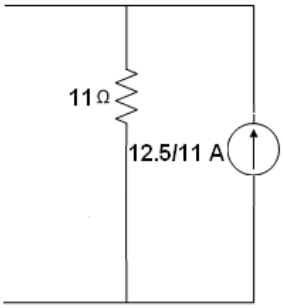

(c) (4 pts) if we insert an additional resistor R_L=2 Ω between terminals a and b, calculate the current through R_L?

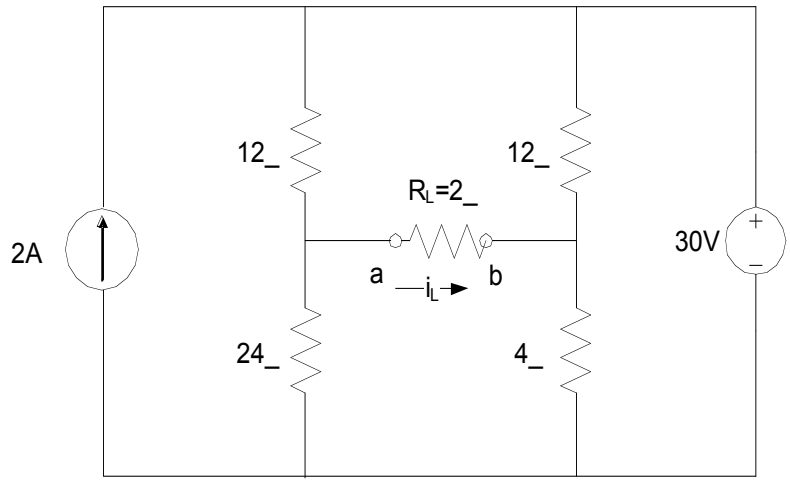

Using the Thevenin equivalent, current through R_L would be 12.5/(11+2) = 12.5/13 A

7. (24 pts) **Semiconductor Physics**
a) (6 pts) Consider a piece silicon doped with Boron at a concentration of 5×10^{17} cm^{-3}. What is the majority carrier, electron or hole? What are the majority carrier concentration and the minority carrier concentration (n_i for Silicon is 10^{10} cm^{-3})?

Boron: Group III (acceptor in Si)
Majority carrier: hole, due to high acceptor concentration

$$p \cong N_A = 5\times10^{17}\,cm^{-3}$$

By mass action law,

$$n = \frac{n_i^{\,2}}{N_A} = \frac{(10\times10^{10}\,cm^{-3})^2}{5\times10^{17}\,cm^{-3}} = 200\ cm^{-3}$$

b) (4 pts) Consider now a p-n junction. You are given the space charge diagram on the right. Express x_1 in terms of x_2, N_A and N_D

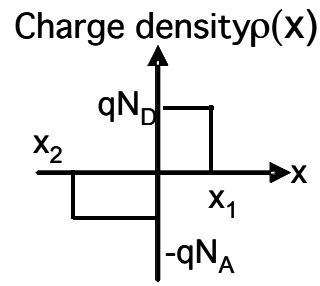

For charge conservation,

$$\frac{-x_2 qN_A}{\varepsilon} = \frac{x_1 qN_D}{\varepsilon} \Rightarrow$$

$$x_1 = x_2\frac{N_A}{N_D}$$

c) (8 pts) Assuming ε is the permittivity of the material. **Derive** the electric field *E*(x) vs. distance x. Given E(-∞) = 0.

For (x_2<x<0):

$$E(x) = \int_{-\infty}^{x}\frac{\rho(x)}{\varepsilon}dx' = \frac{-qN_A}{\varepsilon}\left(x - x_2\right)$$

For (0<x< x_1):

$$E(x) = \int_{-\infty}^{x}\frac{\rho(x)}{\varepsilon}dx' = \int_{0}^{x}\frac{\rho(x)}{\varepsilon}dx' + E(0) = \frac{qN_D}{\varepsilon}x + \frac{qN_A}{\varepsilon}x_2$$

d) (4 pts) Plot E(x) vs. x. **Label** all important points. (Hint: watch out for the sign of E field.)

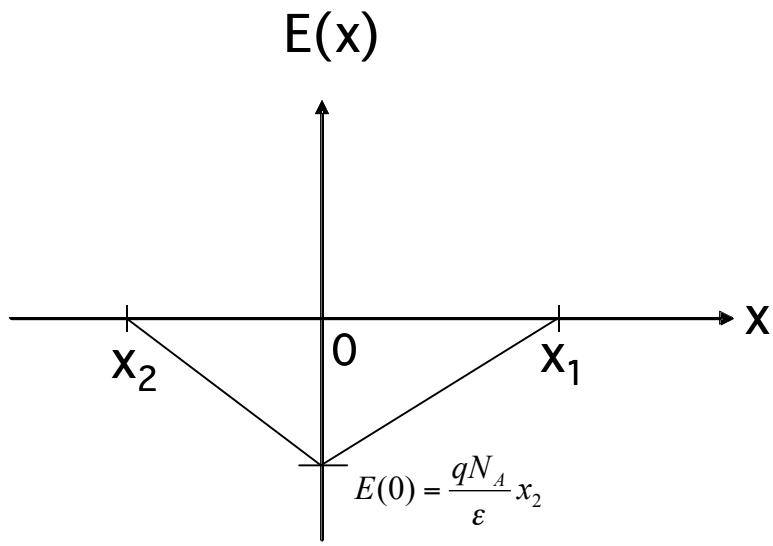

Where $x_2 < 0$

d) (2 pts) **Where** (what x value) is the electric field strongest (largest in magnitude)?

At x = 0, E(x) is most negative.