UNIVERSITY OF CALIFORNIA AT BERKELEY EECS Department

EECS 40/42/100, Spring 2007
Prof. Chang-Hasnain

Homework #5

Due at 6 pm in 240 Cory on Wednesday, 2/28/07
Total Points: 100

- Put (1) your name and (2) **discussion section number** on your homework.
- You need to put down all the derivation steps to obtain full credits of the problems. Numerical answers alone will at best receive low percentage partial credits.
- No late submission will be accepted expect those with prior approval from Prof. Chang-Hasnain.

1. Consider the following circuit:

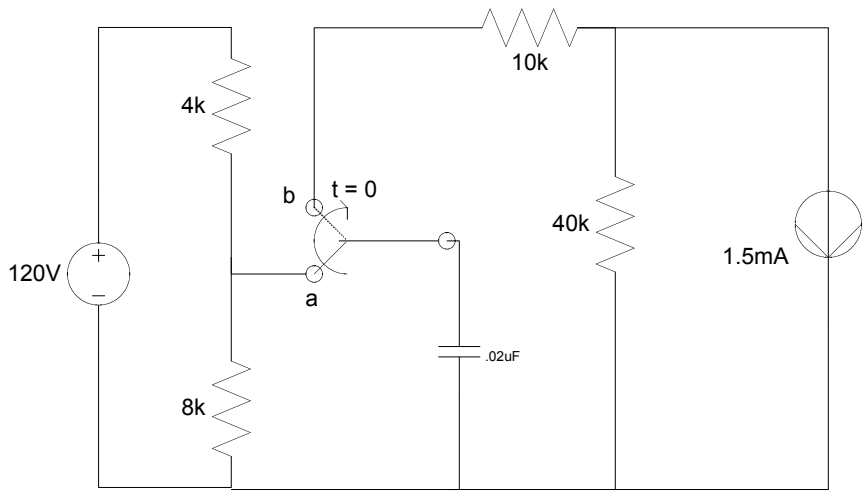

The switch in the circuit shown has been in position a for a long time, At t = 0 the switch is moved to position b. Calculate:

(a) The initial voltage on the capacitor
(b) The final voltage on the capacitor
(c) The time constant for t > 0
(d) The length of time required for capacitor voltage to reach zero after the switch is moved to position b.

2. Hambley, P4.33
3. Hambley, P4.35
4. Hambley, P4.39
5. Hambley, P4.41
6. Hambley, P4.48
7. Hambley, P5.19
8. Hambley, P5.22
9. Hambley, P5.24
10. Hambley, P5.30