EECS 40/42/100, Spring 2007
Prof. Chang-Hasnain

Homework #7

Due at 6 pm in 240 Cory on Wednesday, 03/14/07
Total Points: 100

- Put (1) your name and (2) **discussion section number** on your homework.
- You need to put down all the derivation steps to obtain full credits of the problems. Numerical answers alone will at best receive low percentage partial credits.
- No late submission will be accepted expect those with prior approval from Prof. Chang-Hasnain.

1. Hambley, P6.55
2. Hambley, P6.58
3. Hambley, P6.64
4. Hambley, P6.66
5. Hambley, P6.71
6. Hambley, P6.75
7. Hambley, P6.77
8. Hambley, P6.78

9. Consider the circuit shown below. Sketch the **asymptotic** Bode magnitude and phase plots to scale for the transfer function H(f)=Vout/Vin.

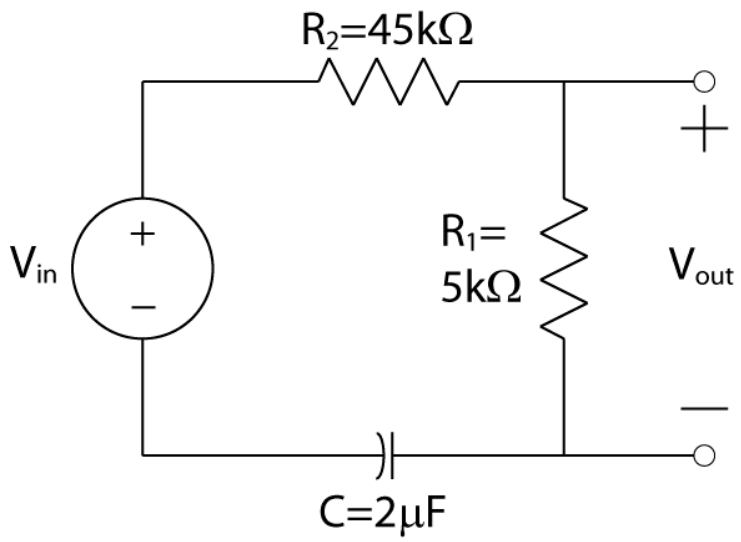

10. Consider the first-order highpass filter shown in Figure P.6.59 in your textbook. The input signal is given by: Vin(t)=10+20cos(200πt)+10cos(2000πt). Find an expression for the output Vout(t) in steady-state conditions.