EE 40 Final Project

Part I: General instruction

1. The final project will count 30% of the lab grading, since it's going to take 3 lab sessions. All other individual labs will count 70% of the lab grading; each of them counts 10%.
2. This project is composed of a basic part and a creation part. Circuit diagram will be provided for the basic part, which is required to be finished at the end of the semester. There are three creation questions with different complexity and different bonus credits. No circuits will be provided for the creation part. You have to design the circuit to realize the function by your own using the components that we can supply. You are allowed to discuss with other students and your GSIs. GSIs can help you analyze if the circuit works but won't give any hints on the design for the first three questions. For the last open question, you are welcome to do whatever you think will be worth doing using the components we have, and discuss any possible function design with your GSIs.
3. Every effort must be made to team up as a team of 2, and if necessary you can change session; only under special circumstances and approval by head GSI is required for forming a team of 3 or doing it alone. Please try to find your lab partners before hand. One of your team members will keep the board and the components during the project period. Try to protect your progress, and keep it in a good condition.
4. Every group will get a project kit with a piece of breadboard and all the components. Please check with the component list in lab guide part V to see if the kit is complete. Keep it in a good condition during the whole project. We don't have many extra parts to supply if you lose any of them.
5. The grading will be mainly based on the lab report and the circuit functionality. Typed lab report is preferred. Hand written is also fine, but has to be neat and clear. Please see part IV for more information on the lab report.
6. Lab report is due on May 6th. We will have a final competition. You may choose to enter the competition to display your work. The competition will be held on Friday May 6th 4-6pm with a snack reception. The professor and all GSIs will attend this reception/competition and select the projects. Each group entering the competition must do a 5-10 minutes show and tell.
   First place (1 team): TBA
   Second place (1 team): TBA
   Third place (1 team): TBA

Part II: Basic Circuit—Light Sensor

1. Function analysis

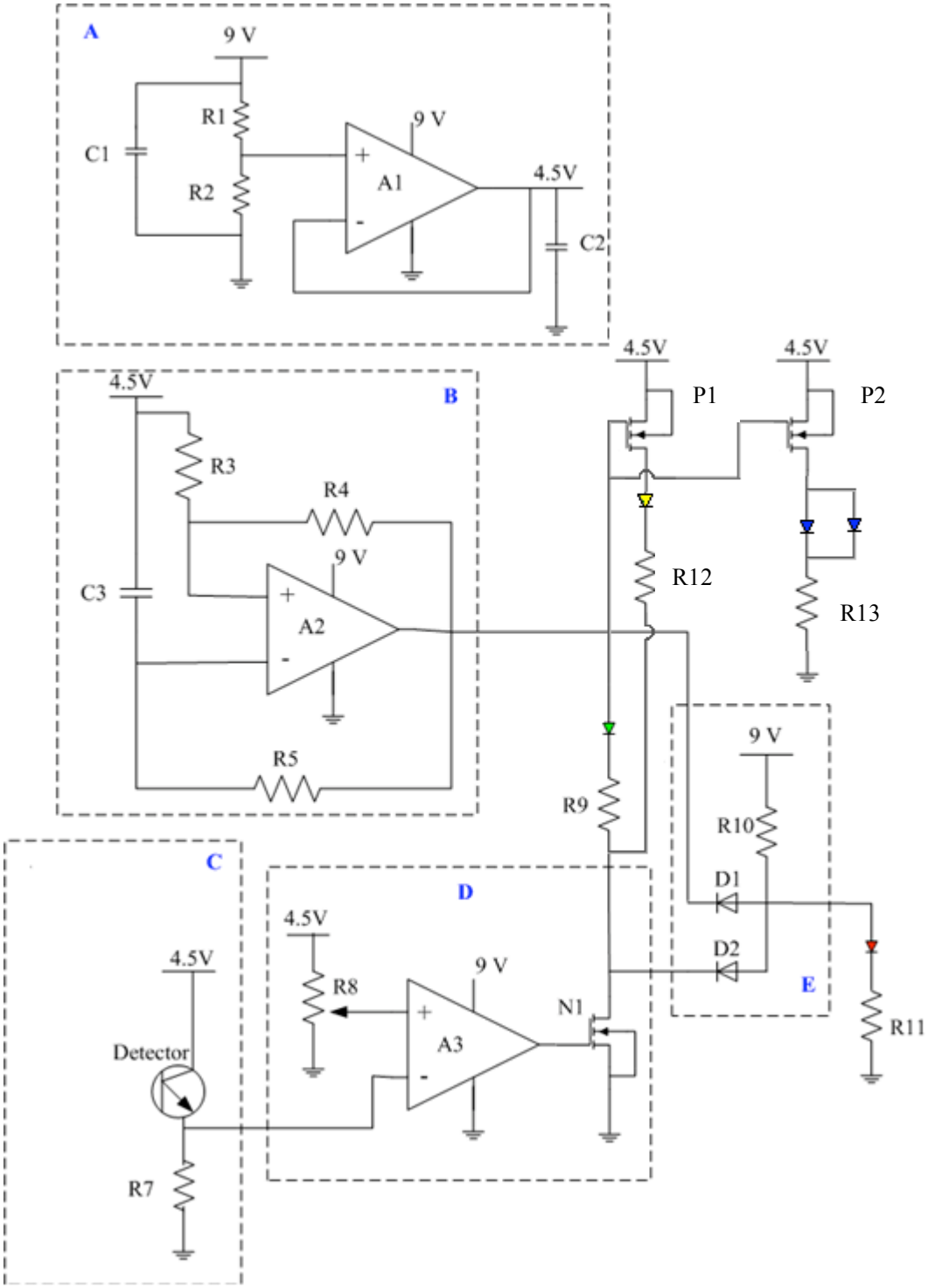

Figure 1. Basic circuit diagram

This is a light sensing circuit. When there is no light shinning on the circuit (mainly the detection part), the green and yellow LED will be flashing and they will be out of phase with each other. When light is shinning on the circuit (mainly the detection part), the red LED will start flashing instead of the green and the yellow ones. The blue LED will be shining whether light is and is not being detected.
The whole circuit can be torn down into 6 basic building blocks labeled A-E and the block containing the yellow and blue LEDs in the diagram. We will analyze them one by one in order to understand the functions.

A. 4.5 V DC power supply.
The circuit is going to be powered by a 9 V battery, but lower DC power is also needed in the circuit. Part A is using an op-amp to build up a simple voltage follower which gives 4.5 V output. Since 4.5 V is half of 9 V, resistors R1 and R2 are equal. C1 and C2 are filtering capacitors, which are usually connected in parallel with the DC output in order to filter out any high frequency AC signal coming from the noise.

B. Square wave oscillator.
Let's analyze it in a time sequence and use 4.5 V as the voltage reference. The circuit diagram can be redrawn as shown in Figure 2 (b).

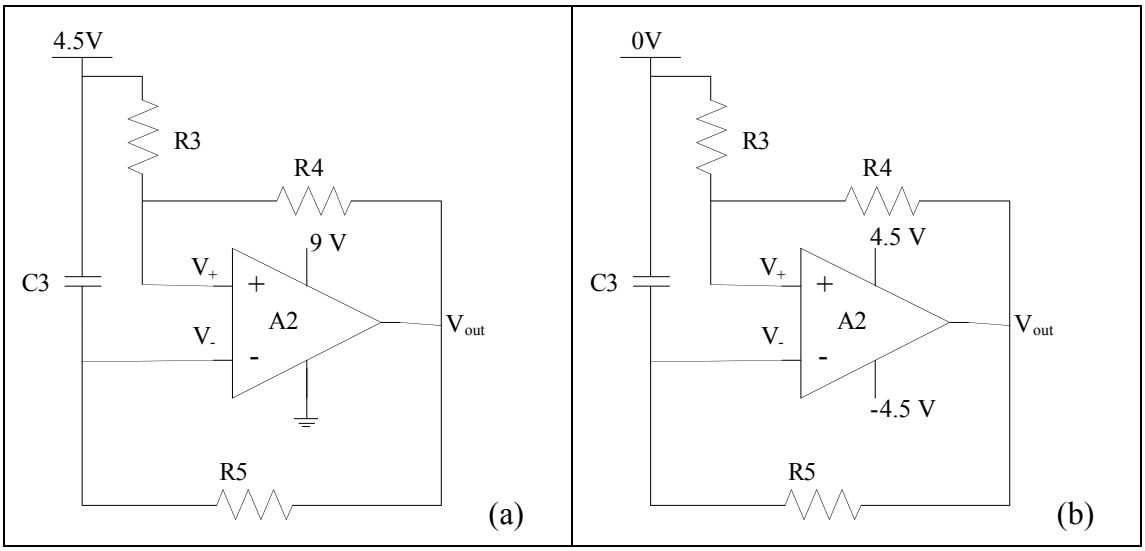

Figure 2. Square wave oscillator (a) with reference at 0 V. (b) with reference at 4.5 V.

Initially $V_{out} = 0$ and there is no charge on the capacitor. However to the reference 4.5 V, $V_{out} = -4.5\,\text{V}$ and $V_- = -4.5\,\text{V}$. Since this circuit has a positive feedback loop, any slight difference between V+ and V- may make V_{out} high or low clamped to the power supply value. In this initial condition, $V_+ = -4.5\dfrac{R_3}{R_3 + R_4} > V_- = -4.5\,\text{V}$, so the

output goes high and get clamped to 4.5 V immediately after the circuit is on. Now the circuit is in state 1: $V_{out} = 4.5\,\text{V}$, $V_+ = 4.5\dfrac{R_3}{R_3 + R_4}$ and capacitor C3 is being charged from V_{out}. So V- is rising up. When V- is as high as or just slightly higher than V+, the circuit toggles because of the positive feedback. Output will be clamped at -4.5 V since $V_- > V_+$. Now the circuit is in state 2: $V_{out} = -4.5\,\text{V}$ and $V_+ = -4.5\dfrac{R_3}{R_3 + R_4}$. The capacitor is being discharged from V_{out}. And V- is falling down. When V- is as low as V+ or just slightly lower than V+, the circuit toggles again because of the positive feedback. Then the output is clamped at 4.5 V again, $V_+ = 4.5\dfrac{R_3}{R_3 + R_4}$ and the capacitor is being charged from V_{out} again.

Therefore, we see that the circuit is toggling between the two states, and the output voltage is either 4.5 V or -4.5 V, which forms a periodic square wave. To understand the oscillation function better, we draw wave forms at V_+, V_- and V_{out} on the same scale as shown in Figure 3(b). It's clear that the threshold voltages of output high and low are $4.5 \times \dfrac{R_3}{R_3 + R_4}$ V and $-4.5 \times \dfrac{R_3}{R_3 + R_4}$ V. Go back to the original circuit with reference at 0 V. We just need to add a DC offset 4.5 V to all the result and waveforms as shown in Figure 3 (a). The threshold voltages changes to $4.5\dfrac{2R_3 + R_4}{R_3 + R_4}$ and $4.5\dfrac{R_4}{R_3 + R_4}$.

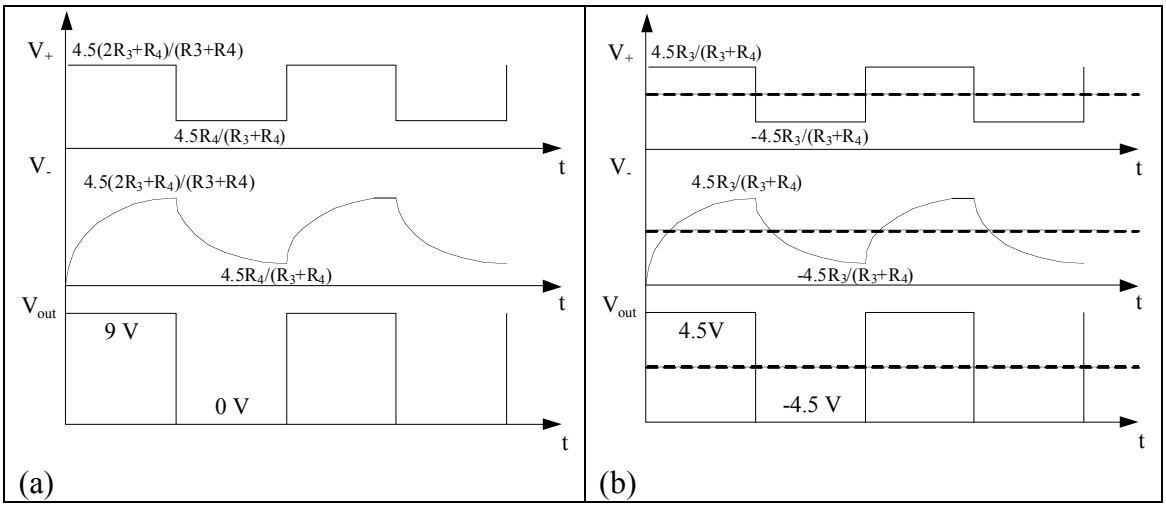

Figure 3. Waveforms of V_+, V_- and V_{out} (a) with reference of 0 V. (b) with reference of 4.5 V

C. Light generation and detection.

Light generation can be realized by a visible LED or any white light source (room light, flash light etc.). Light source intensity is determined by the detector sensitivity. Phototransistor can be used as a detector. Light exposure will increase the current flowing through the phototransistor. Photoresistor is another choice, whose resistance will change when exposed to the light. We will be using the Photoresistor.

D. Comparator and buffer.

Open loop op-amp can be used as a comparator. Positive input connects to a fixed DC voltage used as a reference. Negative input connects to the detector end. When detector detects light, current increases. Therefore the voltage across R7, which is connected to the negative input of the op-amp, increases. When it's lower than the reference voltage, the output will be high—9 V. When it's higher than the reference, the output is low—0 V. Thus the light on/off is converted to L/H of the op-amp output. An NMOS will be connected to the output of the comparator as a buffer since the output will be driving the LED and the logic circuit following. When comparator output (gate voltage of the NMOS) is low, the NMOS is off, thus the drain is high or floating. When comparator output is high, the NMOS is on, thus the drain is grounded. This way, we realize the light on/off to output H/L conversion.

E. AND gate.

Only when both inputs are high, the output is high, which will light up the red LED.

F. Digital Logic LEDs (The yellow and blue LEDs)

Like the NMOS (N1) in part D that turns on when the applied gate voltage is high, this part uses 2 PMOS transistors (P1 and P2) that turn on when the applied gate voltage is low. Note that the gate voltage of both PMOSs is connected to the output of the Square Wave Oscillator from part B. Because the output from this oscillator toggles between 0V (low) and 9V (high), the PMOS transistors turn on and conduct current when the oscillator is at 0V and turns off when the oscillator is at 9V. Let's analyze how the LEDs behave under the two circumstances of when the light is detected and when it isn't detected. Suppose light is not being detected (this means that N1 is on and the red LED is off). When the output from the square wave oscillator is high (9V), the green LED turns on; however P1 and P2 are off because the applied gate voltage is high. This means that both the yellow and blue LEDs will be off. When the output of the square wave oscillator becomes low (0V), the green LED turns off; however P1 and P2 are on because the applied gate voltage is low. This means that both yellow and blue LEDs are on. This implies that when light is not being detected, the yellow and blue LEDs are out of phase with the green LED. Now, suppose that light is being detected (this means that N1 is off). Thus the green and yellow LEDs will not turn because their paths to ground are open-circuited. When the output of the square wave oscillator

is high (9V), the red LED will turn on; however P2 will be off because the applied gate voltage is high. This means that the blue LEDs will be off. When the output of the square wave oscillator becomes low (0V), the red LED will turn off; however P2 will turn on because the applied gate voltage will be low. This means that the blue LEDs will turn on. Thus when light is being detected, the blue LEDs are out of phase with the red LED.

Based on the functions of all the building blocks, the function of the whole circuit is as follows. When light is off, the comparator buffer output is low because N1 is on. So the AND output is low, thus red LED is off. However, the oscillator output will make the green LED flashing and the yellow and blue LEDs flashing out of phase with the green one. When the light is on, the comparator buffer output is high (9 V) because N1 is off, so the AND gate output is high when the oscillator output is in the high period, thus the square wave signal is transmitted to the red LED, which will be flashing then. Because P2 acts as an inverter, the blue LEDs will see an out of phase square wave signal being transmitted to them. In addition, because N1 is off, the green and yellow LEDs will no longer turn on.

2. Hands-on

To build and debug each block separately and then combine them together to realize the whole function will make the process faster and easier. Try to make your circuit clear, compact and neat. It will be nice-looking and easy to debug.

We give general considerations of how to select values of the components and provide recommended values and specifications for some parts.

A. Op-amp is LMC 6482, the same as we used in Lab 6. Power supply will be from a 9 V battery. So V+ (pin 8) is 9 V and V- (pin 4) is 0 V or ground of the circuit. Since the output is 4.5 V, half of the power, we need two equal resistors for R1 and R2. To make the power consumption low, we use 10kΩ for R1 and R2. Filter capacitors C1 and C2 can be 10μF. Smaller values can be used if high frequency noise exists. BE CAREFUL THE POLARITY OF THE CAPACITORS, when connecting them to DC voltage.

B. Human eyes can differentiate frequency smaller than 30 Hz. So we need to make the oscillator frequency in the range 1 ~ 30 Hz. In order to express the frequency in terms of R3, R4 and R5 and C3, let's do some calculations based on the analysis in the above section. Since the two threshold values are symmetric as shown in Figure 3, we know that the duty cycle of the square wave is 50% (half period 9 V and half period 0 V). The period of the square wave is decided by the capacitor charging time constant R5×C3. Let's use the rising half period of V- in Figure 3(a). Since this is a first order RC circuit, the rising part can be express as:

$V_- = 9\left(1 - e^{-\frac{t}{R_5 C_3}}\right)$. At time t_1, $V_- = 9\left(1 - e^{-\frac{t_1}{R_5 C_3}}\right) = 4.5\frac{R_4}{R_3 + R_4}$; at time t_2, $V_- = 9\left(1 - e^{-\frac{t_2}{R_5 C_3}}\right) = 4.5\frac{2R_3 + R_4}{R_3 + R_4}$. The time period $t_2 - t_1 = \frac{T}{2}$, where T is the period of the square wave. So

$$\frac{T}{2} = t_2 - t_1 = R_5 C_3 \ln\frac{2(R_3 + R_4)}{R_4} - R_5 C_3 \ln\frac{2(R_3 + R_4)}{2R_3 + R_4} = R_5 C_3 \ln\frac{2R_3 + R_4}{R_4}.$$

So the period is $T = 2R_5 C_3 \ln\frac{2R_3 + R_4}{R_4}$, and the frequency is

$f = \frac{1}{T} = \frac{1}{2R_5 C_3 \ln\frac{2R_3 + R_4}{R_4}}$. The falling half period of V- will give the same solution of the period or frequency since the signal is symmetric. So to control the frequency in the range of 1~30 Hz, we use R3=R5=10 kΩ, R4=510 Ω and C3=10 μF. Plug all these numbers in the frequency equation, we have the frequency of 1.35 Hz, which is detectable by human eyes.

C. Because we are using a photoresistor, which can detect just the room light with lower sensitivity, R7 = 1 kΩ would be a good choice. With room light on, the resistance can be about 50 Ω, depending on the light intensity. With room light off or simply blocking the surface of it, the resistance can be as high as 1 MΩ. Then R7 and the photoresistor form a simple voltage divider. So

$$V_+ = \frac{R_7}{R_7 + R_{\text{detector}}} \times 4.5\text{ V}.$$

D. Pot R8 is a voltage divider too. It needs to be tuned to the value that makes the output voltage roughly in the middle of the on-off range of V- in order to distinguish light-on and light-off states. 5kΩ pot will be used to provide the voltage reference. Turn it until the output voltage is about 2.5-3 V or even higher, depending on which detector is being used. The NMOS is BS170. The gate threshold voltage is about 2.2 V. Please refer to the spec for more information.

E. D1and D2 can be 1N4148. To keep the current smaller than 30 mA for all the diodes (D1, D2 and LEDs), we use R9 = 1kΩ, R10 = R11 = 510Ω. Any other similar values will be fine too.

F. P1 and P2 are BS250 PMOS transistors and turn on when the applied gate voltage

is below their threshold voltage. Please refer to the spec for more information. P1's gate terminal is connected to the output of the square wave oscillator, its source terminal must be connected to a high voltage, so we can use the 4.5V generated from part A, and its drain terminal is connected to the yellow LED. The yellow LED is connected between the drain of P1 and R12. Because the yellow LED requires a higher turn on voltage, a lower R12 means the LED will be brighter, so we can use R12 = 50 Ω. R12 is connected between the yellow LED and the drain of N1. P2's gate terminal is connected to the output of the square wave oscillator, its source must also be connected to a high voltage, so we can again use the 4.5V generated from part A, and its drain terminal is connected to the 2 blue LEDs. The 2 blue LEDs are connected in parallel with one another and are connected between the drain of P2 and R13. Because the blue LED has a low turn on voltage, a lower R13 means the LED will become very bright, so we can use R13 = 1kΩ. R13 is connected between the 2 blue LEDs and ground.

Table 2 summarizes all the components you may need to build the basic circuit.

R1	10 kΩ	**C1**	10 μF
R2	10 kΩ	**C2**	10 μF
R3	10 kΩ	**C3**	10 μF
R4	510 Ω	**D1/D2**	1N4148
R5	10 kΩ	**N1**	BS170
P1	BS250	**P2**	BS250
R6	-/-/ 200 Ω	**Op-amp**	LMC 6482
R7	1 kΩ	**Light source**	Room
R8	5 kΩ pot	**Detector**	Photoresistor
R9	1 kΩ		
R10	510 Ω	**Battery**	9 V
R11	510 Ω	**LEDs**	Green and Red
R12	50 Ω	**R13**	1 kΩ

Table 2. Basic circuit components summary

Part III: Creation—more functions on the light sensor

1. Creation questions

(1) Make the LED flashing speed adjustable.

(2) Maintaining the basic function of the circuit, add a buzzer to it to make it buzzing with the red LED in phase. When the red LED is on, the buzzer buzzing, when the red LED is off, the buzzer should keep silent.

(3) Open question. For example, try to change the LED flashing speed based on the intensity of the light shinning on the circuit; try to make the circuit function as a motion control or an anti-theft system.

2. Components provided for creation

Creation circuit has to be accomplished by using the parts provided. Please check the component list on the last page when doing your design.

Part IV: Lab report

1. Basic circuit (120 pt)

Please report the result of each building block.

A. 4.5 V DC power supply (20 pt)

- Draw circuit diagram with component values. (4 pt)
- Do analysis on the circuit, such as design principles, important issues.(6 pt)
- Provide measured results, such as wave forms, signal frequency, important voltage levels etc. (6 pt)
- Comparison between analysis and measurement. (2 pt)
- Building block function description. (2 pt)

B. Square wave generator (25 pt)

- Draw circuit diagram with component values. (5 pt)
- Do analysis on the circuit, such as design principles, important issues.(8 pt)
- Provide measured results, such as wave forms, signal frequency, important voltage levels etc. (8 pt)
- Comparison between analysis and measurement. (2 pt)
- Building block function description. (2 pt)

C. Light generation and detection (20 pt)

- Draw circuit diagram with component values. Indicate the scheme that you use. If you use multiple schemes, please describe them all. (4 pt)
- Do analysis on the circuit, such as design principles, important issues.(8 pt)
- Provide measured results, such as wave forms, signal frequency, important voltage levels etc. (6 pt)
- Building block function description. (2 pt)

D. Comparator and buffer (25 pt)

- Draw circuit diagram with component values. (5 pt)
- Do analysis on the circuit, such as design principles, important issues.(8 pt)
- Provide measured results, such as wave forms, signal frequency, important voltage levels etc. (8 pt)
- Building block function description. (4 pt)

E. AND gate (10 pt)

- Draw circuit diagram with component values. (3 pt)
- Do analysis on the circuit, such as design principles, important issues.(3 pt)
- Provide measured results, such as wave forms, signal frequency, important voltage levels etc. You may want to provide measured logic table for this case. (3 pt)
- Building block function description. (1 pt)

F. Yellow and Blue LEDs (20 pt)

- Draw circuit diagram with component values. (3 pt)
- Do analysis on the circuit, such as design principles, important issues, and explain why the Blue and Yellow LEDs respond the way they do, i.e. why

does the Yellow LED only shine when light is not detected and why it is out of phase with the Green LED. Similarly, why do the Blue LEDs shine when light is and is not detected and why it is out of phase with the Green LED. (17 pt)

2. Creation (Bonus up to 50 pt)

For each question, you have to provide **circuit diagram with components' values**, **design analysis (including function analysis and value selection)**, **measured results**. Please address all the important issues or difficulties you encounter in your design and experiment. Please indicate if you realize the required function.

(1) Make the LED flashing speed adjustable. (15 pt)

(2) Maintaining the basic function of the circuit, add a buzzer to it to make it buzzing with the red LED in phase. When the red LED is on, the buzzer buzzing, when the red LED is off, the buzzer should keep silent. (20 pt)

(3). Open question. For example, try to change the LED flashing speed based on the intensity of the light shinning on the circuit; try to make the circuit function as a motion control or an anti-theft system. (Up to 15 pt)

Part V: Component list

Component	Value
Resistor	10 kΩ
	1 kΩ
	510 Ω
	200 Ω 50 Ω
Pot	10 kΩ
	5 kΩ
Capacitor	10 µF
	0.1 µF

Component	Model
Op-amp	LMC 6482
NMOS	BS170
PMOS	BS250
Diode	1N4148
LED	Green, Yellow, Red, Blue
Photoresistor	-
Buzzer	-
Battery	9 V
Breadboard	-