Homework 2 – DUE JULY 2nd at 5 PM in Cory 240. It's long. Start early.

1. Consider a new basic circuit element, which we'll call a "linear diode," which only allows current to flow in one direct, giving us the I-V characteristic shown to below. We represent this device with the symbol on the right:

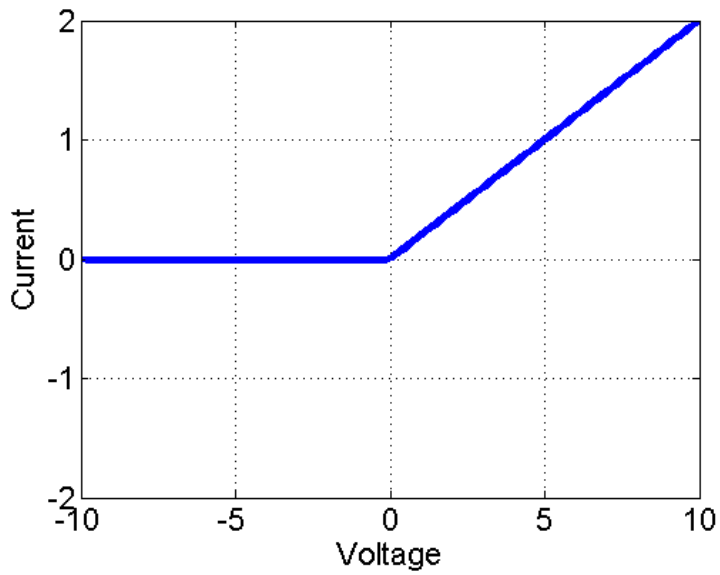

In class, we discussed how any two terminals of a circuit have their own I-V characteristic. What is the I-V characteristic at the indicated terminals of the circuit of two linear diodes shown below (assuming the linear diodes have an IV characteristic with slope 5 as above)? Hint – consider the positive and negative V cases separately.

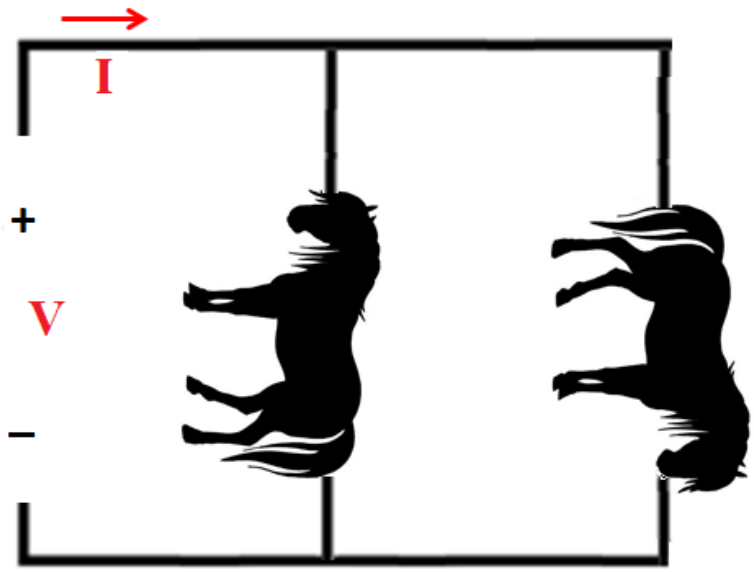

What basic circuit element has this same IV characteristic?

2. Find the I-V characteristic of the circuit below. You may give your answer as an equation or a graph:

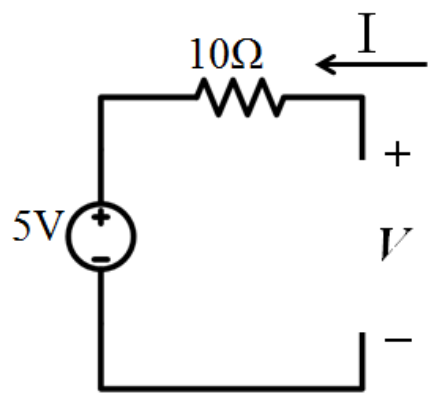

3. Consider the circuit below

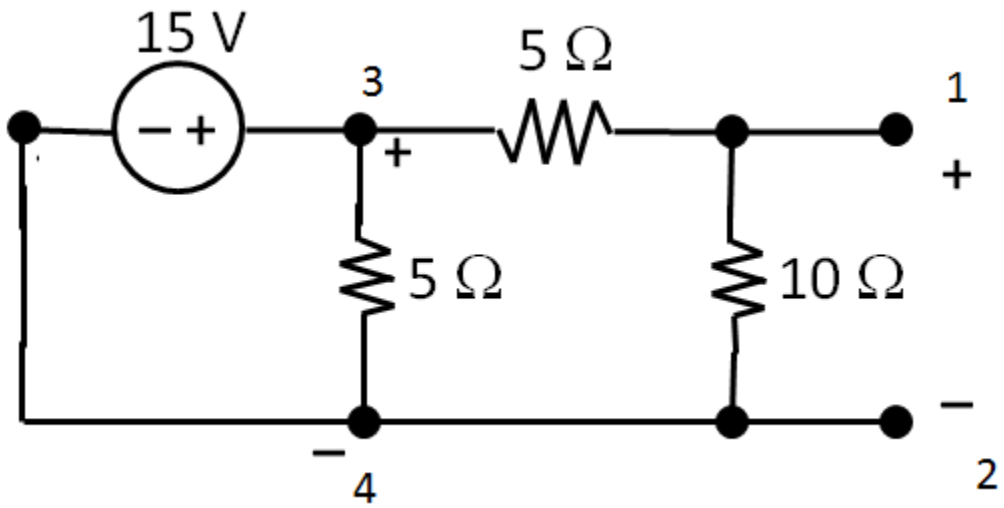

a. Suppose want to calculate the current supplied by the 15V source by finding the equivalent resistance that it sees. What is that equivalent resistance? What is the current?
b. We can think of this whole circuit as a single device. What is the I-V characteristic of this device if the input terminals are 1 and 2, with 1 as the positive terminal? You may give your answer as an equation or a graph (for example, the I-V characteristic of a 5 ohm is I=V/5)
c. Find the Thevenin Equivalent circuit of this circuit with input terminals 1 and 2. How are the I-V characteristics of this Thevenin Equivalent circuit related to the I-V characteristic from part b?
d. Find the Norton Equivalent of this circuit with input terminals 1 and 2.
e. Find the Thevenin Equivalent circuit of this circuit with input terminals 3 and 4 (this is actually very easy, just a tricky question)

4. You have two different 2-terminal "black box" devices (meaning you don't know what's inside, see http://en.wikipedia.org/wiki/Black_box) and want to know what they do.

For each device, you connect a voltage source and then measure the current through the device with an ammeter (with only 1 device connected to the voltage source at a time).

You collect the following data:

Voltage Applied	Current through #1	Current through #2
-4V	-24.8 mA	-15 mA
-2V	-12.4 mA	-9 mA
-1V	-6.2 mA	-6 mA
0V	0 mA	-3 mA
1V	6.2 mA	0 mA
2V	12.4 mA	3 mA
4V	24.8 mA	9 mA
10V	62 mA	27 mA

From the data above, draw the circuit inside the box.

5. Find the Thevenin Equivalent of the circuit below at the indicated terminals.

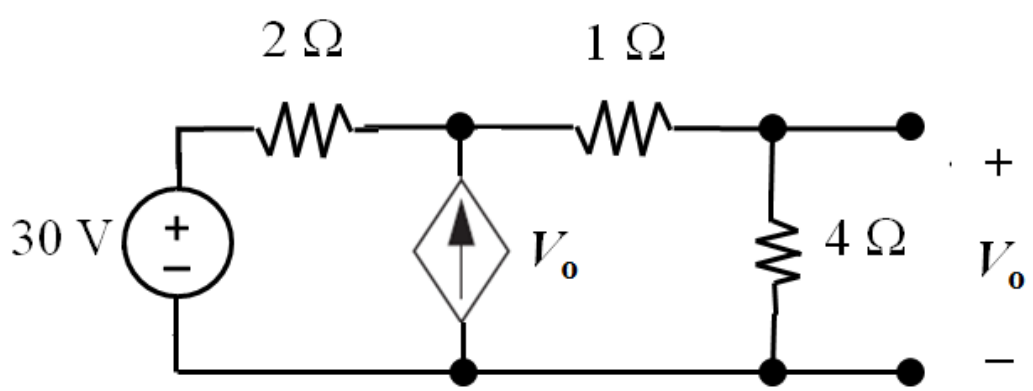

6. Find the equivalent resistance of the infinitely long network shown below.

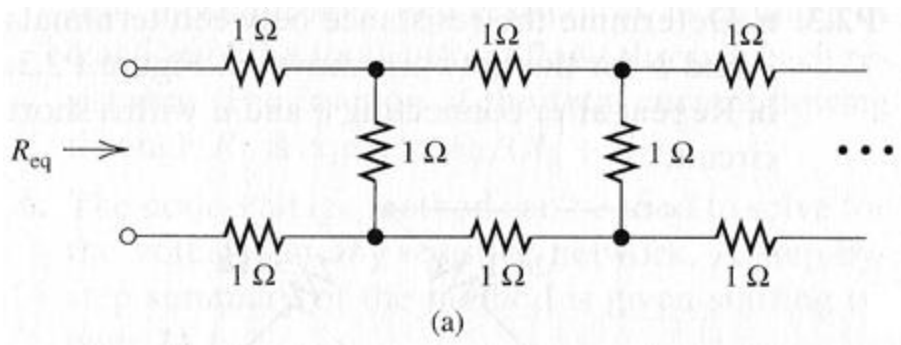

If this network is truly infinite, then building another "rung" on the front will yield a network with the same equivalent resistance, or graphically, the network above has the same R_{eq} as the network below with "one more":

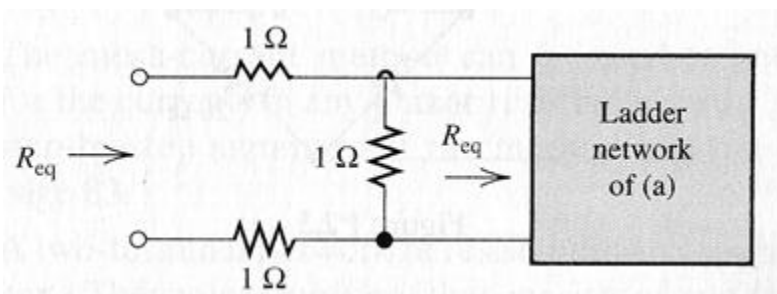

7. Find the power P_L delivered to a purely resistive load by a Thevenin circuit with voltage V_{TH} and resistance R_{TH} as a function of load resistance R_L. Use simple calculus to deduce the optimal load for power delivery.

8. Find **I** as a function of $\mathbf{V_i}$, assuming the op-amp does not saturate and has gain A=5.

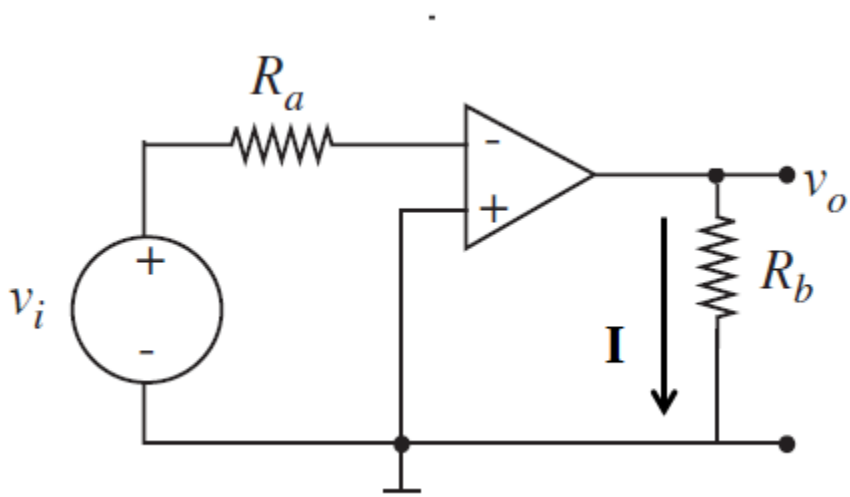

9. Find the close-loop voltage gain (i.e. v_o/v_{in}) for the ideal op-amp circuit in the circuit below:

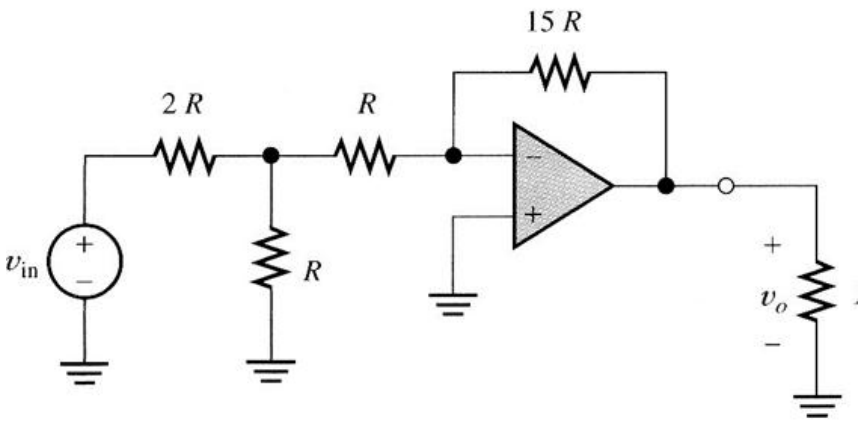

Extra problems (not for a grade):

1. Does the circuit below have a Thevenin Equivalent?

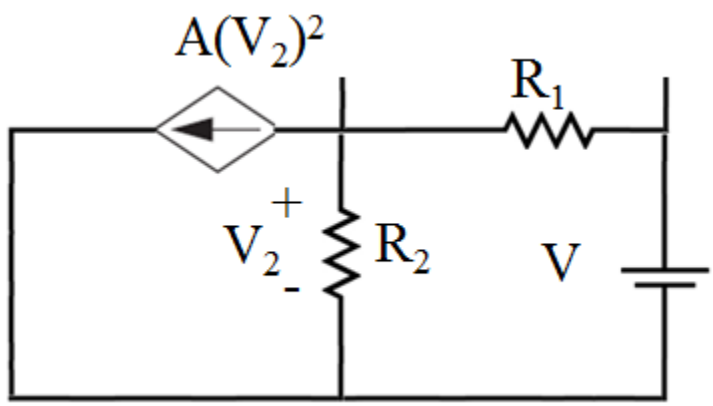

2. For the circuit in problem 4, what happens to the Thevenin Equivalent as the strength of the dependent is increased?