University of California, Berkeley
EE42
Fall 2004

Problem set 8
Due Wednesday, November 10, 5:00pm, box in Cory 240

1) (RC review)

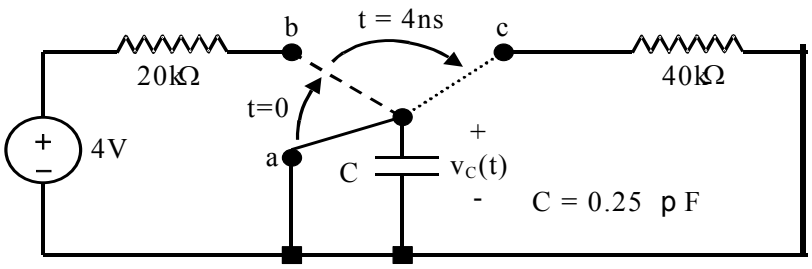

Assume that the capacitor is initially uncharged and for $t < 0$, the switch is at position a. From $0 < t < 4$ns, the switch is at position b. From 4ns $< t < \infty$, the switch is at position c. Sketch $v_C(t)$ for $0 \le t \le \infty$. (Beware; there is no single equation, the different time regions have different solutions (for example for $t<0$, $v_C(t) = 0$).
(Hint: for the two time regions you consider you need the solution to the first to be able to initialize the second)

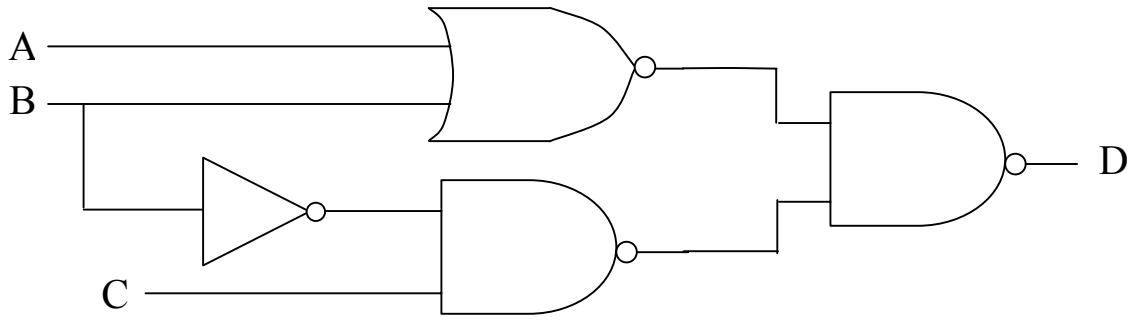

2) Consider the circuit above (from lecture). (a) Show the timing diagram if **A, B** are both **1**(and stay **1**), and **C** is suddenly switched from **1** to **0.** (b) What is the logic function which is executed by this circuit? (Note this part has nothing to do with part a) . (c) Given this logic function, simplify it if you can, but in any case show a NAND gate implementation of the circuit. (That means express the logic function in sum-of-products form and from that draw the NAND gate circuit that implements the function.) Assume you have 1,2,3,4 input NAND gates, as many as you need.

3) For the following 2V logic circuit the input waveforms A(t) and B(t) are shown. The actual logic blocks are modeled by ideal logic blocks with RC circuits at their inputs. We assume that the ideal logic blocks (INV1 and NAND1) trigger at 1V, i.e. halfway between low and high and switch instantly. That means for example that if the input node to the ideal inverter is slowly rising from 0 to 2V then at the instant it crosses 1V the output of the ideal inverter suddenly jumps from 2V to 0V. Let R= 10K, C=0.5pF. Assume that prior to this transient A was low and B was high, both for a long time.

(a) Neatly sketch $V_x(t)$, $V_y(t)$, $V_z(t)$, V_w (t)and F(t)

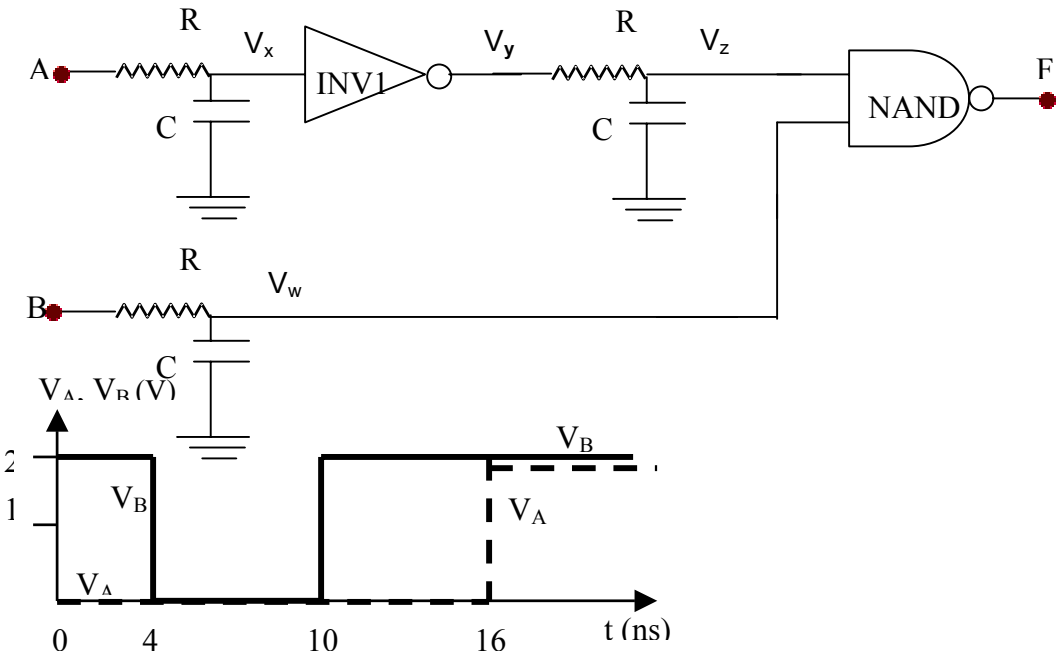

(b) At what times does F go high (in nsec).

(c) What is the gate delay in nsec.

4) Consider a capacitor (1pF) charged by a current source (I_S =10μA). (a) If the capacitor is initially uncharged, calculate how long it takes (in nanoseconds) to charge up to 1V. (Hint: this is not an RC problem; use the capacitor constitutive equation and integrate. The integration is easy since the current is constant!) (b) Now consider charging the initially uncharged capacitor to 1V using a voltage source V_{DD} and a resistor. Show that it takes 0.69 RC for the voltage to rise from 0 to 1V (i.e. V_{DD} /2). (c) Using the voltage source and resistor, what is the value of R needed to achieve the same result as part (a), that is to charge the capacitor to 1V in the same time as the answer to (a). (d) If we say the answer to part (c) is fV_{DD}/I_S then what is the fraction f? (Hint: in lecture we will show that f is within 4% of 0.75, so your answer better be close to 0.75).